Bonfiglioli
Riduttori

BN-BE-BX series

Three-phase asynchronous motors

IE1-IE2-IE3

3~

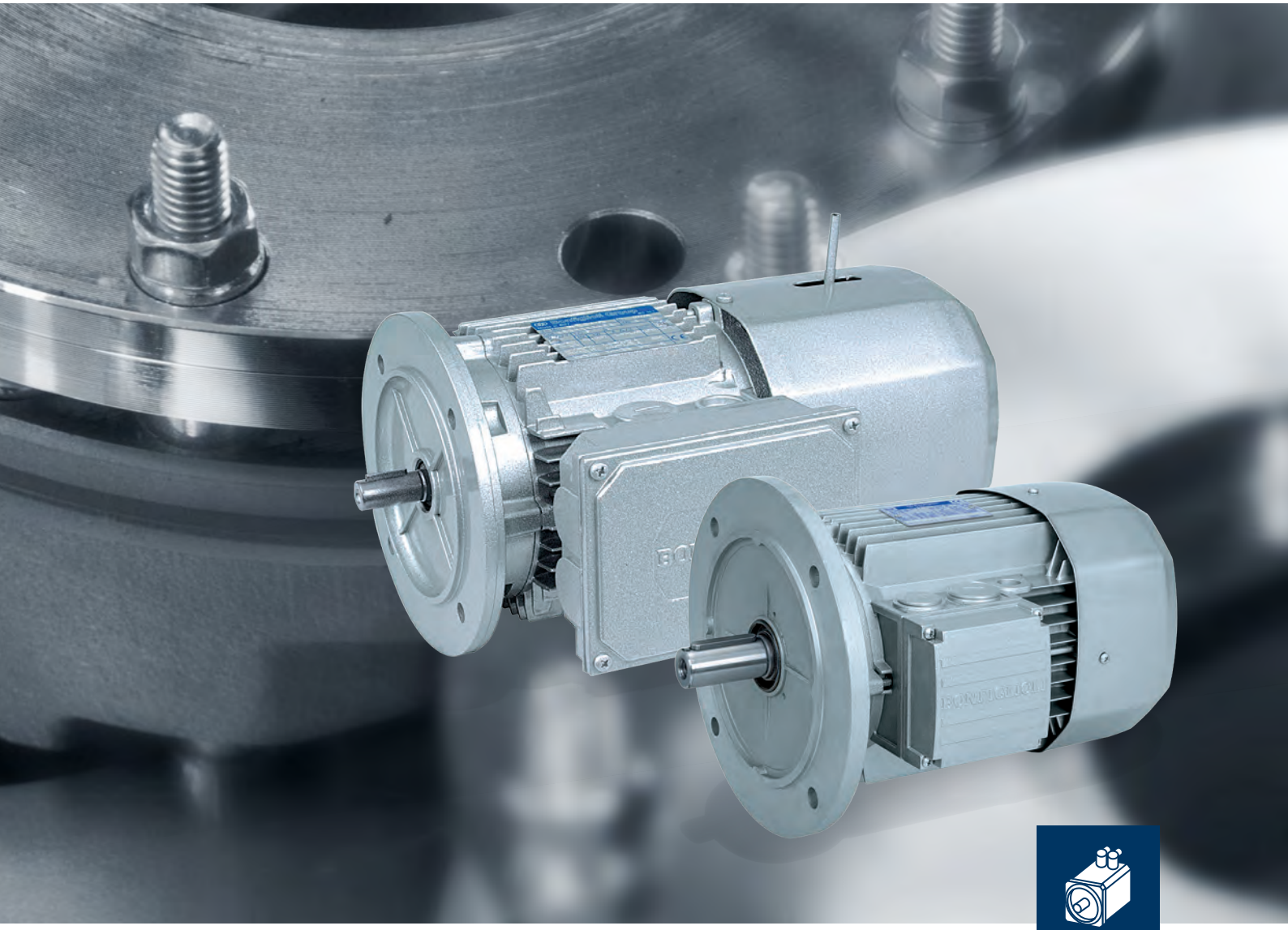

PRODUCT

Bonfiglioli
Forever Forward

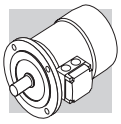

Chapter	Description	Page
1	Symbols and units of measurement	2
2	Introduction	3
3	General characteristics	5
	3.1 Production range	5
	3.2 Standards	5
	3.3 Directives 2006/95/EC (LVD) and 2004/108/EC (EMC)	6
	3.4 Tolerances	6
4...4.2	Motor designation	7
	4.3 Variants	10
	4.4 Options	10
	4.5 Brake-related options	11
	4.6 Example of identification plate	11
5	Mechanical features	12
	5.1 Versions	12
	5.2 Degree of protection	13
	5.3 Cooling	14
	5.4 Direction of rotation	15
	5.5 Noise	15
	5.6 Vibrations and balancing	15
	5.7 Terminal box	15
	5.8 Cable entry	16
	5.9 Bearings	16
6	Electrical characteristics	17
	6.1 Voltage	17
	6.2 Frequency	18
	6.3 Ambient temperature	19
	6.4 50 HZ normalized power	19
	6.5 Motors for USA and Canada	19
	6.6 China Compulsory Certification	21
	6.7 Insulation class	21
	6.8 Type of duty	22
	6.9 Inverter-controlled motors	23
	6.10 Permissible starts per hour, Z	24
7	Asynchronous brake motors	25
	7.1 Operation	25
	7.2 Most significant features	25
8	DC brake motors type FD	26
	8.1 Degree of protection	27
	8.2 FD brake power supply	27
	8.3 FD brake technical specifications	29
	8.4 FD brake connections	29
9	AC brake motors type FA	31
	9.1 Degree of protection	31
	9.2 FA brake power supply FA	32
	9.3 Technical specifications of FA brakes	32
	9.4 FA brake connections	33
10	Brake release systems	34
	10.1 Release lever orientation	35
	10.2 Separate brake supply	35
11	Options	36
	11.1 Soft-start / stop	36
	11.2 Capacitive filter	36
	11.3 Thermal protective devices	36
	11.4 Thermistors	36
	11.5 Bimetallic thermostates	37
	11.6 Plug connector	37
	11.7 Control of brake operation	40
	11.8 Additional cable entry for brakemotors	40
	11.9 Anti-condensation heaters	40
	11.10 Tropicalization	41
	11.11 Second shaft extension	41
	11.12 Rotor balancing	41
	11.13 Ventilation	42
	11.14 Rain canopy	44
	11.15 Textile canopy	44
	11.16 Feedback units	44
	11.17 Surface protection	46
	11.18 Painting	46
	11.19 Certificates	47
12	Tables of motors correlation	47
	12.1 50 Hz Motors	47
	12.2 60 Hz Motors	49
13	Motor rating charts BX	51
14	Motors dimensions BX	53
15	Motor rating charts BE	65
16	Motors dimensions BE	67
17	Motor rating charts BN	70
18	Motors dimensions BN	80

Revisions

Refer to page 90 for the catalogue revision index. Visit www.bonfiglioli.com to search for catalogues with up-to-date revisions.

1 SYMBOLS AND UNITS OF MEASUREMENT

Symbols	Units of Measure	Description
cosφ	–	Power factor
η	–	Efficiency
f_m	–	Power adjusting factor
I	–	Cyclic duration factor
I_N	[A]	Rated current
I_S	[A]	Locked rotor current
J_C	[Kgm^2]	Load moment of inertia
J_M	[Kgm^2]	Moment of inertia
K_c	–	Torque factor
K_d	–	Load factor
K_J	–	Inertia factor
M_A	[Nm]	Mean breakaway torque
M_B	[Nm]	Brake torque
M_N	[Nm]	Rated torque
M_L	[Nm]	Counter-torque during acceleration
M_S	[Nm]	Starting torque

Symbols	Units of Measure	Description
n	[min^{-1}]	Rated speed
P_B	[W]	Power drawn by the brake at 20°C
P_n	[kW]	Motor rated power
P_r	[kW]	Required power
t_1	[ms]	Brake response time with one-way rectifier
t_{1s}	[ms]	Brake response time with electronic-controlled rectifier
t_2	[ms]	Brake reaction time with a.c. disconnect
t_{2c}	[ms]	Brake reaction time with a.c. and d.c. disconnect
t_a	[°C]	Ambient temperature
t_f	[min]	Work time at constant load
t_r	[min]	Rest time
W	[J]	Braking work between service interval
W_{max}	[J]	Maximum brake work for each braking
Z	[1/h]	Permissible starting frequency, loaded
Z_0	[1/h]	Max. permissible unloaded starting frequency (I = 50%)

Bonfiglioli Riduttori

2 INTRODUCTION

Efficiency classes and test methods

Efficiency classes characterise the efficiency with which an electric motor converts electrical energy into mechanical energy. In Europe, the energy efficiency of low voltage electric motors used to be classified using the voluntary Eff1/Eff2/Eff3 system. Outside Europe, other countries used to apply their own national systems, often very different to the European system. This uncertainty in standards led manufacturers to develop a harmonised international standard, and push for the issue of IEC (International Electrotechnical Commission) standard IEC 60034-30-1 “Efficiency classes of single-speed, three-phase, cage-induction motors (IE code)”.

This new standard:
- defines new classes of efficiency
  IE1 (standard efficiency)
  IE2 (high efficiency)
  IE3 (premium efficiency)
- provides a common, international reference system for the classification of electric motors and for national legislation
- introduces a new efficiency measurement method in conformity with standard IEC 60034-1-2:2007

The following table shows the correspondence among the main classes.

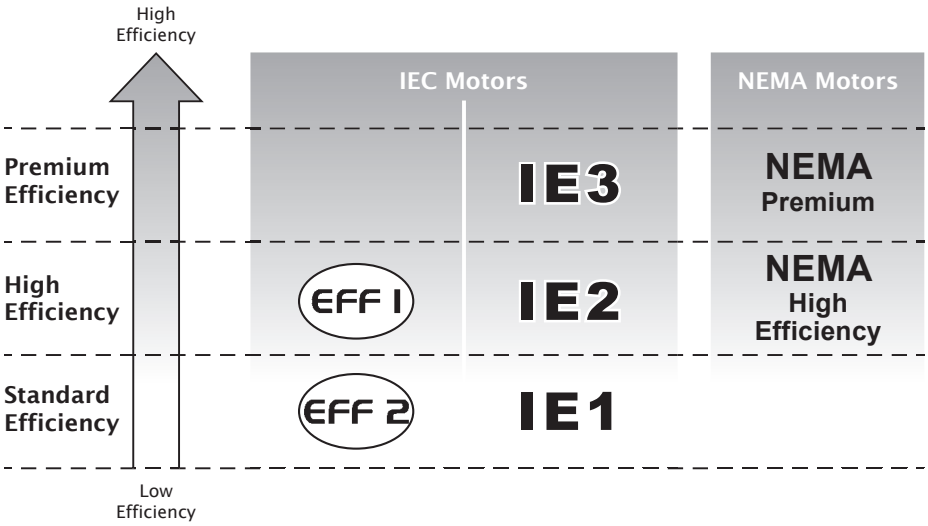

European Commission regulation 640/2009

IEC standard 60034-30-1 establishes technical guidelines for efficiency classification but does not impose any legal requirements for the adoption of any particular efficiency class. These are laid down by European Directives and national laws.

The EC Regulation applying Directive 2005/32/EC was adopted on the 22nd July 2009. This establishes the legal requirements and eco-compatible design criteria for electric motors, and imposes minimum efficiency limits according to the following schedule:

- **16/06/2011:** Electric motors must have a minimum efficiency level equivalent to class **IE2**
- **01/01/2015**: Electric motors with a rated power output between 7.5 kW and 375 kW must have a minimum efficiency level corresponding to **IE3**, or to **IE2** if controlled by an inverter.
- **01/01/2017:** Electric motors with a rated power output between 0.75 kW and 375 kW must have a minimum efficiency level corresponding to **IE3**, or to **IE2** if controlled by an inverter.

Scope and exclusions

EC Regulation 640/2009 applies to 2, 4, and 6 pole, single-speed, three-phase, 50 Hz or 60 Hz, cage-induction motors with rated outputs of 0.75 kW to 375 kW, and rated voltage up to 1000 V, designed for continuous duty (S1).

The regulation does not apply to:

- brakemotors
- motors designed to function immersed in liquid
- motors that are fully integrated in a product (like a gearbox, pump, fan), so that it is not possible
- to test the performance of the motor independently of that of the product.
- motors expressly designed to function:

- at altitudes above 4000 metres a.s.l.;
- in ambient temperatures above 60 °C;
- at maximum operating temperatures above 400 °C;
- in ambient temperatures below -30 °C (all motors) or below 0 °C (water-cooled motors);
- with incoming liquid coolants at temperatures below 0 °C or above 32 °C;
- in potentially explosive atmospheres as defined by Directive 2014/34/EU.

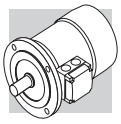

3 GENERAL CHARACTERISTICS

3.1 Production range

The asynchronous three-phase electric motors BX, BE, BN of BONFIGLIOLI RIDUTTORI's production, are available in basic designs IMB3, IMB5 and IMB14 and derived versions.
Motors are the enclosed type with outer fan and cage-tipe rotor for use in industrial environments. Standard versions of BX/BE motors are 230/400V Δ/Y (400/690V Δ/Y in sizes BX/BE 160 and BX/BE 180), 50 Hz motors, with a tolerance of ±10%. Standard BN motors are designed to operate from a rated voltage 230/400V Δ/Y (400/690V Δ/Y for frame sizes BN 160 through BN 200) 50 Hz, with ±10% tolerance.

3.2 Standards

The motors described in this catalogue are manufactured to the applicable standards shown in the following table.

(F01)

Title	CEI	IEC
General requirements for rotating electrical machines	**CEI EN 60034-1**	**IEC 60034-1**
Terminal markings and direction of rotation of rotating machines	**CEI 2-8**	**IEC 60034-8**
Methods of cooling for electrical machines	**CEI EN 60034-6**	**IEC 60034-6**
Dimensions and output ratings for rotating electrical machines	**EN 50347**	**IEC 60072**
Classification of degree of protection provided by enclosures for rotating machines	**CEI EN 60034-5**	**IEC 60034-5**
Noise limits	**CEI EN 60034-9**	**IEC 60034-9**
Classification of type of construction and mounting arrangements	**CEI EN 60034-7**	**IEC 60034-7**
Rated voltage for low voltage mains power	**CEI 8-6**	**IEC 60038**
Vibration level of electric machines	**CEI EN 60034-14**	**IEC 60034-14**
Efficiency classes of single-speed, three-phase, cage-induction motors (IE code)	**CEI EN 60034-30-1**	**IEC 60034-30-1**
Standard method for determining losses and efficiency from tests	**CEI EN 60034-2-1**	**IEC 60034-2-1**

The motors also comply with foreign standards adapted to IEC 60034-1 as shown here below.

(F02)

DIN VDE 0530	Germany
BS5000 / BS4999	Great Britain
AS 1359	Australia
NBNC 51 - 101	Belgium
NEK - IEC 34	Norway
NF C 51	France
OEVE M 10	Austria
SEV 3009	Switzerland
NEN 3173	Netherlands
SS 426 01 01	Sweden

3.3 Directives 2006/95/EC (LVD) and 2004/108/EC (EMC)

BX, BE, BN motors meet the requirements of Directives 2006/95/EC (Low Voltage Directive) and 2004/108/EC (Electromagnetic Compatibility Directive) and their name plates bear the CE mark.
As for the EMC Directive, construction is in accordance with standards CEI EN 60034-1, EN 61000-6-2, EN 61000-6-4.
Motors with FD brakes, when fitted with the suitable capacitive filter at rectifier input (option **CF**), meet the emission limits required by Standard EN 61000-6-3:2007 “Electromagnetic compatibility - Generic Emission Standard - Part 6-3 Residential, commercial and light industrial environment”.
Motors also meet the requirements of standard CEI EN 60204-1 “Electrical equipment of machines”.
The responsibility for final product safety and compliance with applicable directives rests with the manufacturer or the assembler who incorporate the motors as component parts.

3.4 Tolerances

As per the Norms CEI EN 60034-1, applicable the tolerances here below apply to the following quantities.

(F03)

-0.15 (1 - η) P ≤ 50kW	Efficiency
-(1 - cosφ)/6 min 0.02 max 0.07	Power factor
±20% *	Slip
+20%	Locked rotor current
-15% +25%	Locked rotor torque
-10%	Max. torque

(*) ± 30% for motors with Pn < 1 kW

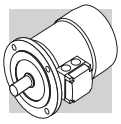

4 PREMIUM EFFICIENCY MOTOR DESIGNATION

MOTOR — BRAKE

132 230/400-50 IP55 CLF B5 7.5 R SB 220SA .....

OPTIONS

BRAKE SUPPLY

RECTIFIER TYPE
AC/DC
NB, **SB**, **NBR**, **SBR**

BRAKE HAND RELEASE
R, **RM**

BRAKE TORQUE

BRAKE TYPE
FD (d.c. brake)
FA (a.c. brake)

MOTOR MOUNTING
IM B3 - IM B6, IM B7, IM B8, IM V5, IM V6
IM B5 - IM V1, IM V3
IM B14 - IM V18, IM V19

INSULATION CLASS
CL F standard
CL H option

DEGREE OF PROTECTION
IP55 standard (IP56 - option)
IP54, **IP55** brake motor

VOLTAGE - FREQUENCY

50Hz	60Hz
230/400 VΔ/Y - 50Hz (BX 80 ... 132)	**230/460 VY/Y - 60Hz** (BX 90 ... 132)
290/500 VΔ/Y - 50Hz (BX 80 ... 132)	**230/460 VΔΔ/Δ - 60Hz** (BX 160 ... 180)
400/690 VΔ/Y - 50Hz (BX 160 ... 180)	**330/575 VΔ/Y - 60Hz** (BX 90 ... 180)
290/500 VΔ/Y - 50Hz (BX 160 ... 180)	**265/460 VΔ/Y - 60Hz** (BX 90 ... 132)
	460/800 VΔ/Y - 60Hz (BX 160 ... 180)

POLE NUMBER
4

MOTOR SIZE
80B ... 180L (IEC motor)

MOTOR TYPE
BX = IEC 3-phase, class IE3

4.1 HIGH EFFICIENCY MOTOR DESIGNATION

MOTOR

E 230/400-50 IP55 CLF B5 .....

OPTIONS

MOTOR MOUNTING
IM B3 - IM B6, IM B7, IM B8, IM V5, IM V6
IM B5 - IM V1, IM V3
IM B14 - IM V18, IM V19

INSULATION CLASS
CL F standard
CL H option

DEGREE OF PROTECTION
IP55 standard (IP56 - option)

VOLTAGE - FREQUENCY

POLE NUMBER
2, **4**, **6**

MOTOR SIZE
80B ... 180L (IEC motor)

MOTOR TYPE
BE = IEC 3-phase, class IE2

4.2 STANDARD EFFICIENCY MOTOR DESIGNATION

MOTOR | BRAKE

230/400-50 IP55 CLF B5 | 7.5 R SB 220SA .....

OPTIONS

BRAKE SUPPLY

RECTIFIER TYPE
AC/DC
NB, **SB**, **NBR**, **SBR**

BRAKE HAND RELEASE
R, **RM**

BRAKE TORQUE

BRAKE TYPE
FD (d.c. brake)
FA (a.c. brake)

MOTOR MOUNTING
IM B3 - IM B6, IM B7, IM B8, IM V5, IM V6
IM B5 - IM V1, IM V3
IM B14 - IM V18, IM V19

INSULATION CLASS
CL F standard
CL H option

DEGREE OF PROTECTION
IP55 standard (IP56 - option)
IP54, **IP55** brake motor

VOLTAGE - FREQUENCY

POLE NUMBER
2, **4**, **6**, **2/4**, **2/6**, **2/8**, **2/12**, **4/6**, **4/8**

MOTOR SIZE
56A ... 200LA (IEC motor)

MOTOR TYPE
BN = IEC 3-phase

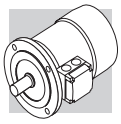

4.3 Variants

(F04)

Description		Default	Option		Page
Voltage		230/400/50			17
Protection class	BX - BE - BN	IP 55	IP 56		13
	BX_FD - BX_FA - BN_FD - BN_FA	IP 54	IP 55		
Insulation class		CLF	CLH		21
Design version	BX - BE - BN	**B5** **B5 R**	**B14** **B14 R**	**B3**	12

Default values.

4.4 Options

(F05)

Description	Catalogue numbers						Availability	Page
Thermal protective devices	**D3**	**K1**	**E3**				BX - BE - BN	36 37
50 Hz normalized power	**PN**						BN	19
Feedback devices	**EN1**	**EN2**	**EN3**	**EN4**	**EN5**	**EN6**	BX - BE - BN	44 45
Anti-condensate heaters	**H1**	**NH1**					BX - BE - BN	40
Tropicalized windings	**TP**						BX - BE - BN	41
Double-extended shaft	**PS**						BX - BE - BN	41
Rotor balancing grade B	**RV**						BX - BE - BN	41
External mechanical protections	**RC**	**TC**					BX - BE - BN	44
Forced ventilation	**U1**	**U2***					BX - BE - BN	43
Certification	**CUS**						BX - BE - BN	19
China Compulsory Certification	**CCC**						BE - BN	21
Plug connector	**CON**						BX - BE - BN	37
Surface protection	**C_**						BX - BE - BN	46
Painting	**RAL**						BX - BE - BN	46
Certificates	**ACM**						BX - BE - BN	47
Inspection certificate	**CC**						BX - BE - BN	47
Type of duty	**S2**	**S3**	**S9**				BN	22

* Only for motors BN

4.5 Brake-related options

(F06)

Description	Catalogue numbers				Availability	Page
Brake torque	Refer to the specific brake type					29 32
Manual release lever	**R**	**RM**			BX - BN	34
Release lever orientation	**AB**	**AA**	**AC**	**AD**	BX - BN	35
DC brake rectifier	**NB**	**NBR**	**SB**	**SBR**	BX - BN	27
Soft-start flywheel	**F1**				BN	36
Capacitive filter	**CF**				BX - BN	36
Brake separate power supply (*)	**...SA**	**...SD**			BX - BN	35
Brake functionality check	**MSW**				BX - BN	40
Additional cable entry for brake motors	**IC**				BX - BN	40

(*) Specify voltage.

Default values.

4.6 Example of identification plate

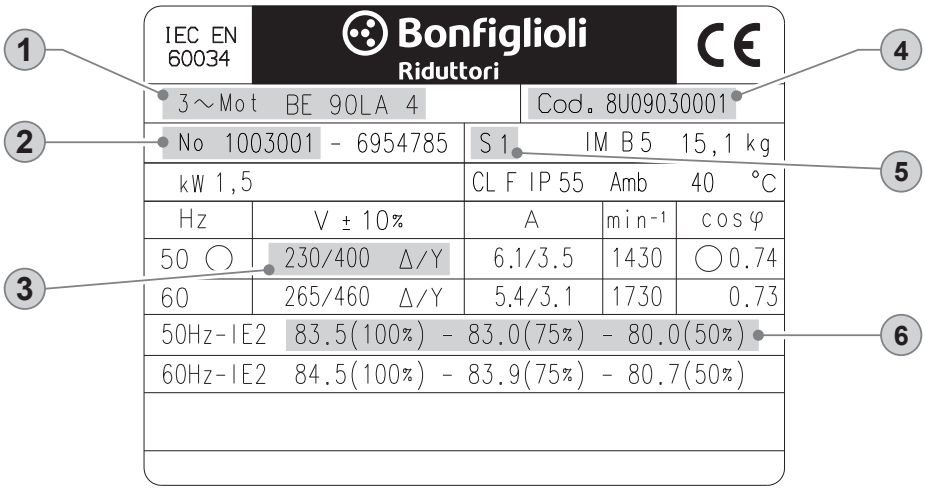

① BONFIGLIOLI Motor type

② Serial number

③ Rated voltage

④ Motor code

⑤ Type of duty: S1 Continuous duty

⑥ IE Class, Efficiency at: 4/4 - 3/4 - 2/4 load

5 MECHANICAL FEATURES

5.1 Versions

EC-normalised BX, BE and BN motors are available in the design versions as indicated in the table below here after as per Standards EN 60034-7 (BX/BE), CEI EN 60034-14 (BN).

Mounting versions are:

IM B3 (basic)
IM B6, IM B7, IM B8, IM V5, IM V6 (derived)
IM B5 (basic)
IM V1, IM V3 (derived)
IM B14 (basic)
IM V18, IM V19 (derived)

IM B3 design motors can be installed in positions IM B6, IM B7, IM B8, IM V5 and IM V63; IM B5 design motors can be installed in positions IM V1 and IM V3; IM B14 design motors can be installed in positions IM V18 and IM V19.
In such cases, the basic design IM B5 or IM B14 is indicated on the motor name plate.
In design versions with a vertically located motor and shaft downwards, it is recommended to request the drip cover (always necessary for brake motors). This facility, included in the option list should be specified when ordering as it does not come as a standard device

(F07)

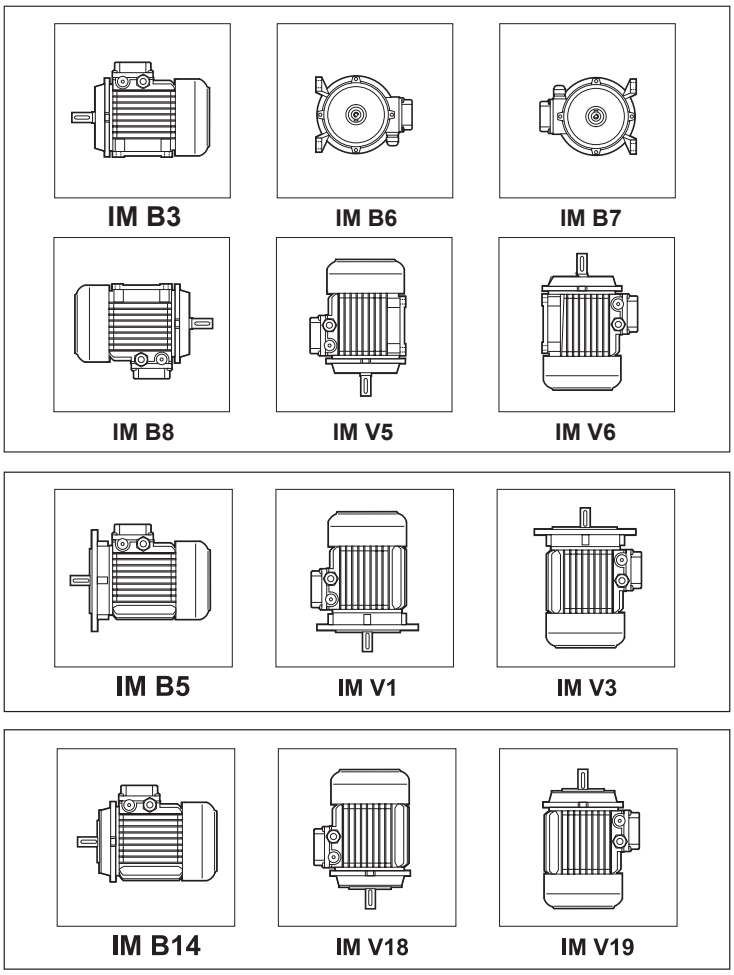

Flange output motors are also available with reduced coupling dimensions, as indicated in the table below - executions **B5R, B14R**.

(F08)

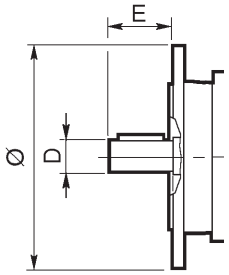

	BN 71	BX/BE/BN 80	BX/BE/BN 90	BX/BE/BN 100	BX/BE/BN 112	BX/BE/BN 132
	DxE - Ø					
B5R (1)	11x23 - 140	14x30 - 160	19x40 - 200	24x50 - 200	24x50 - 200	28x60 - 250
B14R (2)	11x23 - 90	14x30 - 105	19x40 - 120	24x50 - 140	—	—

(1) flange with through holes
(2) flange with threaded holes

5.2 Degree of protection

IP..

The following chart provides an overview of the degrees of protection available.
In addition to the degree of protection specified when ordering, motors to be installed outdoors require protection against direct sunlight and also – when they are to be installed vertically down – a drip cover to prevent the ingress of water and solid particles (option **RC**).

(F09)

	IP 54	IP 55	IP 56
BX - BE - BN	⊖	standard	at request
BX_FD **BX_FA** **BN_FD** **BN_FA**	standard	at request	⊖

IP	5	5

0		Not protected
1		Protected against extraneous solid bodies having Ø ≥ 50 mm
2		Protected against extraneous solid bodies having Ø ≥ 12.5 mm
3		Protected against extraneous solid bodies having Ø ≥ 2.5 mm
4		Protected against extraneous solid bodies having Ø ≥ 1.0 mm
5		Protected against dust
6		No dust ingress

0		Not protected
1		Protected against vertical water drips
2		Protected against vertical water drips inclined up to 15°
3	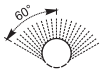	Protected against rain
4		Protected against water splashes
5		Protected against jets of water
6	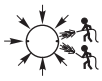	Protected against powerful jets of water
7		Protected against the effects of temporary immersion
8	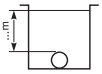	Protected against the effects of continuous immersion

5.3 Cooling

The motors are externally ventilated (IC 411 to CEI EN 60034-6) and are equipped with a plastic fan working in both directions.
The motors must be installed allowing sufficient space between fan cowl and the nearest wall to ensure free air intake and allow access for maintenance purposes on motor and brake, if supplied.
Independent, forced air ventilation (IC 416) can be supplied on request (option **U1**).
This solution enables to increase the motor duty factor when driven by an inverter and operating at reduced speed.

5.4 Direction of rotation

Rotation is possible in both directions. If terminals U1, V1, and W1 are connected to line phases L1,L2 and L3, clockwise rotation (looking from drive end) is obtained. For counterclockwise rotation, switch two phases.

5.5 Noise

Noise levels, measured using the method prescribed by ISO 1680 Standards, are within the maximum levels specified by Standards CEI EN 60034-9.

5.6 Vibrations and balancing

Rotor shafts are balanced with half key fitted and fall within the vibration class N, as per Standard CEI EN 60034-14.

5.7 Terminal box

Terminal board features 6 studs for eyelet terminal connection (9 studs execution for US voltage “Dual Voltage”). A ground terminal is also supplied for earthing of the equipment. Terminals number and type are shown in the following table. For brake power supply, please read par. 8 (brake FD), 9 (brake FA). In motor design IM B3, the terminal box is at the top (side opposite to feet).
Brakemotors house the a.c./d.c. rectifier (factory pre-wired) inside the terminal box.
Wiring instructions are provided either in the box or in the user manual.

(F10)

	No. of terminals	Terminal threads	Wiremax cross section area sq mm^2
BX 80, BX 90 BE 80, BE 90 BN 56 ... BN 90	6	M4	2.5
BX 100 ... BX 132 BE 100 ... BE 132 BN 100 ... BN 160MR	6	M5	6
BX 160 - BE 160 ... BE 180M BN 160M ... BN 180M	6	M6	16
BX 180 - BE 180L BN 180L ... BN 200L	6	M8	25
BX 80 ... BX 132 BE 80 ... BE 132 BN 63 ... BN 160MR	9	M4	6
BX 160 ... BX 180 BE 160 ... BE 180 BN 160M ... BN 200	9	M6	16

5.8 Cable entry

The holes used to bring cables to terminal boxes use metric threads in accordance with standard EN 50262 as indicated in the table here after.

(F11)

	Cable gland and dimensions		Maximum cable diameter allowed [mm]
BN 63	2 x M20 x 1.5	1 Hole on each side	13
BN 71	2 x M25 x 1.5		17
BX 80 - BX 90 **BE 80 - BE 90** **BN 80 - BN 90**	2 x M25 x 1.5		17
BX 100 - BX 112 **BE 100 - BE 112** **BN 100 - BN 112**	2 x M32 x 1.5	2 Holes on each side	21
	2 x M25 x 1.5		17
BX 132 - BE 132 **BN 132...BN 160MR**	4 x M32 x 1.5		21
BX 160 - BX 180 **BE 160 - BE 180** **BN 160M...BN 200L**	2 x M40 x 1.5	Pivoting, 4 x 90°	28

5.9 Bearings

Life lubricated preloaded radial ball bearings are used, types are shown in the chart here under.
Calculated endurance lifetime L_{10h}, as per ISO 281, in unloaded condition, exceeds 40000 hrs.
DE = drive end
NDE = non drive end

(F12)

	DE	**NDE**	
	BX, BE, BN	**BX, BE, BN**	**BN_FD** **BN_FA**
BN 56	6201 2Z C3	6201 2Z C3	–
BN 63	6201 2Z C3	6201 2Z C3	6201 2RS C3
BN 71	6202 2Z C3	6202 2Z C3	6202 2RS C3
BX 80 - BE 80 **BN 80**	6204 2Z C3	6204 2Z C3	6204 2RS C3
BX 90 - BE 90 **BN 90**	6205 2Z C3	6205 2Z C3	6305 2RS C3
BX 100 - BE 100 **BN 100**	6206 2Z C3	6206 2Z C3	6206 2RS C3
BX 112 - BE 112 **BN 112**	6306 2Z C3	6306 2Z C3	6306 2RS C3
BX 132 - BE 132 **BN 132**	6308 2Z C3	6308 2Z C3	6308 2RS C3
BN 160MR	6309 2Z C3	6308 2Z C3	6308 2RS C3
BX 160M/L **BE 160M/L** **BN 160M/L**	6309 2Z C3	6309 2Z C3	6309 2RS C3
BN 180M	6310 2Z C3	6309 2Z C3	6309 2RS C3
BX 180M/L **BE 180M/L** **BN 180L**	6310 2Z C3	6310 2Z C3	6310 2RS C3
BN 200L	6312 2Z C3	6310 2Z C3	6310 2RS C3

6 ELECTRICAL CHARACTERISTICS

6.1 Voltage

Single speed motors are provided in standard execution either for nominal voltage 230 / 400 V Δ/Y, 50 Hz, or 400 / 690 V Δ/Y, 50 Hz, with a voltage tolerance of ± 10%, according to what is specified on the below table.
On all the motors BN, for which the voltage / frequency configuration is not included on the below table, the voltage tolerance is reduced down to ± 5%.
For the operation out of the tolerance boundaries, the temperature may exceed by 10 K the limit provided by the adopted insulation class.
The motors are suitable for operation on distribution European grid with voltage complying with the pubblication IEC 60038.

(F13)

Efficiency class		V_{mot} ± 10 % 3 ~	Configuration
IE3	**BX 80 ... 132**	230 / 400 V - Δ/Y - 50 Hz	standard
	BX 160, BX 180	400 / 690 V - Δ/Y - 50 Hz	standard
IE2	**BE 80 … 132**	230 / 400 V - Δ/Y - 50 Hz	standard
		460 V Y - 60 Hz[1]	standard
		400 / 690 V - Δ/Y - 50 Hz	At request, carries no extra charge
	BE 160, BE 180	400 / 690 V - Δ/Y - 50 Hz	standard
		460 V Δ - 60 Hz[1]	standard
IE1	**BN 56 … BN 132**	230 / 400 V - Δ/Y - 50 Hz	standard
		400 / 690 V - Δ/Y - 50 Hz	At request, carries no extra charge
		460 V Y - 60 Hz	standard
	BN 160 … 200	400 / 690 V - Δ/Y - 50 Hz	standard
		460 V Δ - 60 Hz	standard

[1] 4 pole motor only

The only rated voltage for motors type at 50 Hz and all double speed motors is 400 V.
Applicable tolerances as per CEI EN 60034-1.

The table below shows the wiring options available.

(F14)

Number of poles		Winding connection
2	**BE 80 … BE 160 - BN 63 … BN 200**	Δ / Y (²)
4	**BX 80 ... BX 180** **BE 80 … BE 180 - BN 56 … BN 200**	
6	**BE 90 … BE 160 - BN 63 … BN 200**	
8	**BN 71 … BN 132**	
2/4	**BN 63 … BN 132**	Δ / YY (Dahlander)
2/6	**BN 71 … BN 132**	Y / Y (Two windings)
2/8	**BN 71 … BN 132**	
2/12	**BN 80 … BN 132**	
4/6	**BN 71 … BN 132**	
4/8	**BN 80 … BN 132**	Δ / YY (Dahlander)

(²) Motors with voltage in ratio 2 (ex. 230/460 - 60) will be equipped with a 9 pin terminal box with winding connection either Δ Δ/ Δ or YY / Y (except 6 pole BN 63 Δ / Y)

6.2 Frequency

Rated output power BN for 60 Hz operation is shown in the following diagram.

(F15)

	P_n [kW]			
	2P	**4P**	**6P**	**8P**
BN 56A	–	0.07	–	–
BN 56B	–	0.10	–	–
BN 63A	0.21	0.14	0.10	–
BN 63B	0.30	0.21	0.14	–
BN 63C	0.45	0.30	–	–
BN 71A	0.45	0.30	0.21	0.10
BN 71B	0.65	0.45	0.30	0.14
BN 71C	0.90	0.65	0.45	–
BN 80A	0.90	0.65	0.45	0.21
BN 80B	1.30	0.90	0.65	0.30
BN 80C	1.80	1.3	0.90	–
BN 90S	–	1.3	0.90	0.45
BN 90SA	1.8	–	–	–
BN 90SB	2.2	–	–	–
BN 90L	2.5	–	1.3	0.65
BN 90LA	–	1.8	–	–
BN 90LB	–	2.2	–	–

	P_n [kW]			
	2P	**4P**	**6P**	**8P**
BN 100L	3.5	–	–	–
BN 100LA	–	2.5	1.8	0.85
BN 100LB	4.7	3.5	2.2	1.3
BN 112M	4.7	4.7	2.5	1.8
BN 132S	–	6.5	3.5	2.5
BN 132SA	6.5	–	–	–
BN 132SB	8.7	–	–	–
BN 132M	11	–	–	3.5
BN 132MA	–	8.7	4.6	–
BN 132MB	–	11	6.5	–
BN 160MR	12.5	12.5	–	–
BN 160MB	17.5	––	–	–
BN 160M	–	–	8.6	–
BN 160L	21.5	17.5	12.6	–
BN 180M	24.5	21.5	–	–
BN 180L	–	25.3	17.5	–
BN 200L	–	34	–	–
BN 200LA	34	–	22	–

BX and BE motors are available at 60 Hz on a 4 pole configuration only, and their power rating is the same as their 50 Hz counterpart. Double speed BN motors supplied at 60 Hz will have an increase of nominal power, referred to 50 Hz, equal to 15%, whereas double speed BX / BE motors are not available. If a nominal power rating, equal to the normalised nominal power rating at 50 Hz, was requested to be on a nameplate of a motor meant to be voltage supplied at 60 Hz, the PN option shall be specified on the motor designation. Motors normally designed for a 50 Hz frequency may be used on a 60 Hz operating grid, but the related data shall be updated according to the following table.

Motors designated for 50 Hz operation show on the nameplate also the values for 60 Hz operation (excluding motors in CUS execution and brake motors). See the following table.

(F16)

	50 Hz	**60 Hz**			
	V - 50 Hz	**V** - 60 Hz	**Pn** - 60 Hz	M_n, M_a/M_n - 60 Hz	**n** [min^{-1}] - 60 Hz
BX/BE	**230/400 Δ/Y**	265 - 460 Δ Y	1	0.83	1.2
	400/690 Δ/Y	460 Δ			
BN	**230/400 Δ/Y**	220 - 240 Δ			
		380 - 415 Y			
	400/690 Δ/Y	380 - 415 Δ			
BN	**230/400 Δ/Y**	265 - 280 Δ	1.15	1	1.2
		440 - 480 Y			
	400/690 Δ/Y	440 - 480 Δ			

6.3 Ambient temperature

Catalogue rating values are calculated for 50 Hz operation and for standard ambient conditions (temperature 40 °C; elevation ≤ 1000 m a.s.l.) as per the CEI EN 60034-1 Standards.
The motors can be used within the 40 - 60 °C temperature range with rated power output adjusted by factors given in the table below.

(F17)

Ambient temperature (°C)	40°	45°	50°	55°	60°
Permitted power as a % of rated power	100%	95%	90%	85%	80%

Should a derating factor higher than 15% apply please consult factory.

6.4 50 HZ normalized power

PN

With this option, motor name plate includes 50 Hz normalized power information even when motor is designated for operation with 60 Hz power mains. For 60 Hz supplies along with voltages 230/460V and 575V the PN option is applied by default.

6.5 Motors for USA and Canada

CUS

CUS option is available in NEMA Design C execution for BN and BE motors, and NEMA Design B for BX motors, with regards to the electrical features. Motors are certified in compliance with CSA (Canadian Standard) C22.2 N° 100 and UL (Underwriters Laboratory) UL 1004-1 standards, as stated on UL file E308649.
BN and BE motors nameplates show the below marks:

C US

BX motors nameplates show the below marks and are certified in compliance with the energy efficiency standards in effect in the USA and Canada, respectively provided by DOE (10 CFR Part 431) and NRCan (Energy Efficiency Regulations), tested according to CSA C390 standard.

ENERGY C US

CC320B

NOTES:

1. Starting from **June, 1st 2016**, CUS motors whose efficiency is below IE3 (i.e. “Premium Efficiency”) cannot be any longer sold in the USA and Canada, unless one or more of the following conditions apply:
   - Double speed motors;
   - Motors plated for a non - continuous duty (<80%);
   - Motors intended to be operated through variable frequency drive only (properly equipped with “Inverter Duty Only” label, or similar).

2. BX 100 motors are available for the USA only and not for Canada, and the related marks reported on the nameplates are the following:

ENERGY

CC320B

The CUS option does not apply to servo-ventilated motors.
US power mains voltages and the corresponding rated voltages to be specified for the motor are indicated in the following table:

(F18)

Frequency	Mains voltage	V_{mot}
60 Hz	208 V	**200 V**
	240 V	**230 V**
	480 V	**460 V**
	600 V	**575 V**

CUS option is applicable onto 50 Hz operating motors as well (motors BX excluded).

Motors with voltage in ratio 2 (e.g. 230/460-60; 220/440-60) feature, as standard, a 9-stud terminal board. For same executions, as well as for 575V-60Hz supply, the nominal rating is coincident with the correspondent 50Hz rating.
For DC brake motors type FD, the rectifier is connected to a single-phase 230 VAC supply voltage in the motor terminal box.
Brake power supply for brake motors is as follows:

(F19)

BX_FD - BN_FD
Connected to terminal box 1~230V c.a.

BX_FA - BN_FA		Power supply
Separate power supply	230V Δ	230SA
Separate power supply	460V Y	460SA

6.6 China Compulsory Certification

CCC

Electric motors destined for sale in the People's Republic of China have to be certified under the CCC (China Compulsory Certification) system. BN motors of up to 7 Nm in rated torque are available with CCC certification and a special nameplate bearing the mark shown below:

CCC option is not currently available for IE3 motors.
CCC option is not currently available for servo - ventilated motors.

6.7 Insulation class

CL F

Bonfiglioli motors use class **F** insulating materials (enamelled wire, insulators, impregnation resins) as compare to the standard motor.
In standard motors, stator windings over temperature normally stays below the 80 K limit corresponding to class B over temperature.
A careful selection of insulating components makes the motors compatible with tropical climates and normal vibration.
For applications involving the presence of aggressive chemicals or high humidity, contact Bonfiglioli Engineering for assistance with product selection.

CL H

Motors manufactured in insulation class **H** are available at request.
Not available for motors in compliance with CSA e UL standards (CUS option).

(F20)

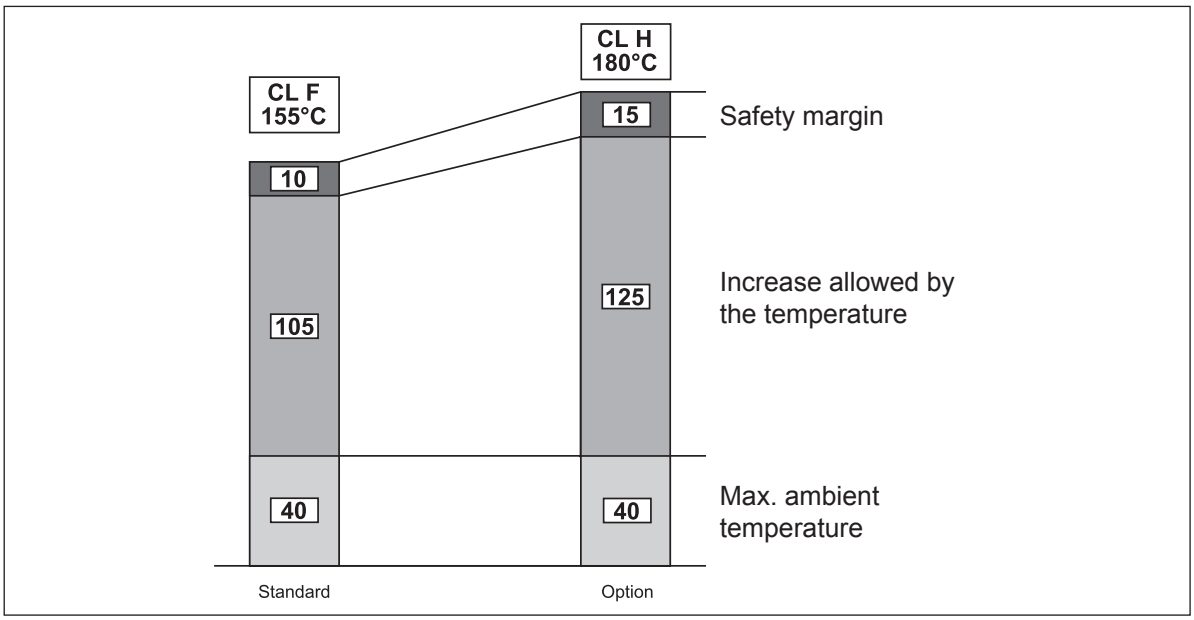

6.8 Type of duty

Unless otherwise specified, catalogue motor power refers to continuous duty S1. Any operating conditions other than S1 duty must be identified in accordance with duty cycle definitions laid down in standards CEI EN 60034-1. For duty cycles S2 and S3, the power increase co-efficient reported in the following table may be used. Please note that the table provided below applies to single-speed motors. As an alternative to S1 continuous duty, one of the following values can be specified at the product configuration stage (single speed motors only): S2, S3 or S9. The motor nameplate will be marked with an increased power rating to suit the type of duty, and with specific electrical data and a duty type of S2-30 min, S3-70% or S9 respectively. For further details, contact Bonfiglioli's Technical Service. Please contact Bonfiglioli Engineering for the power increase coefficients applicable to switch-pole motors.

(F21)

	Type of duty						
	S2			**S3 ***			**S4 - S9**
	Duration (min)			Intermittence (I)			Contact us
	10	**30 (*)**	**60**	**25%**	**40%**	**70% (*)**	
f_m	1.35	1.15	1.05	1.25	1.15	1.1	

* Cycle duration must, in any event, be equal to or less than 10 minutes; if this time is exceeded, please contact our Technical Service.
(*) Default values from options (tab. F05).

6.8.1 Cyclic duration factor:

$$I = \frac{t_f}{t_f + t_r} \cdot 100 \qquad (01)$$

t_f = work time under constant load
t_r = rest time

6.8.2 Limited duration duty S2

This type of duty is characterized by operation at constant load for a limited time, which is shorter than the time required to reach thermal equilibrium, followed by a rest period of sufficient duration to restore ambient temperature in the motor.

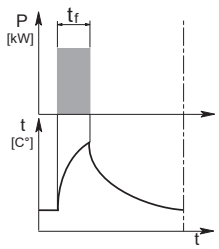

6.8.3 Periodical intermittent duty S3:

This type of duty is characterized by a sequence of identical operation cycles, each including a constant load operation period and a rest period.
For this type of duty, the starting current does not significantly influence overtemperature.

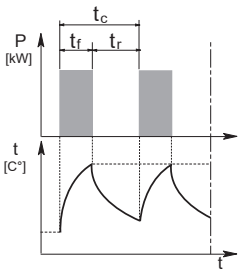

6.9 Inverter-controlled motors

The electric motors Bonfiglioli may be used in combination with PWM inverters with rated voltage at transformer input up to 500 V.Standard motors use a phase insulating system with separators, class 2 enamelled wire and class H impregnation resins (1600V peak-to-peak voltage pulse capacity and rise edge t_s > 0.1µs at motor terminals). Typical torque/speed curves referred to S1 duty for motors with base frequency f_b = 50 Hz is are reported in the table below.
Because ventilation is somewhat impaired in operation at lower frequencies (about 30 Hz), standard motors with incorporated fan (IC411) require adequate torque derating or - alternately - the addition of a separate supply fan cooling. Above base frequency, upon reaching the maximum output voltage of the inverter, the motor enters a steady-power field of operation, and shaft torque drops with ratio ($f/_{fb}$). As motor maximum torque decreases with $(f/_{fb})^2$, the allowed overloading must be reduced progressively.

(F22)

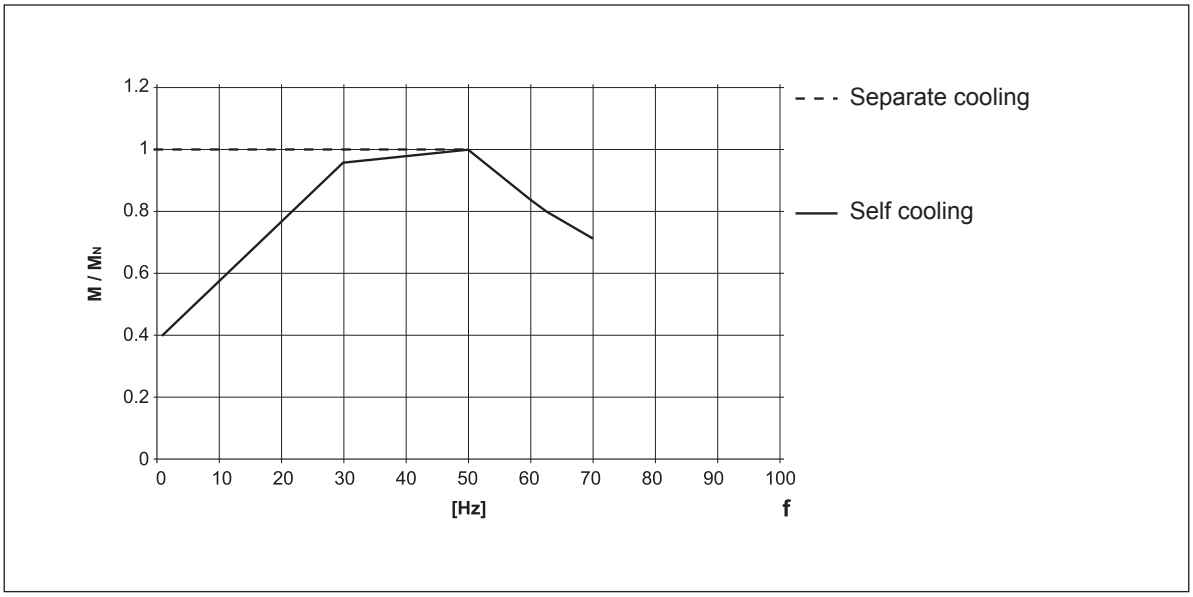

The following table reports the mechanical speed limit for motors operating above rated frequency:

(F23)

	n [min-1]		
	2p	**4p**	**6p**
≤ BE 112 - BN 112	5200	4000	3000
≥ BE 132 - BN 132	4500	4000	3000
BX 80 ... BX 180		4000	

Above rated speed, motors generate increased mechanical vibration and fan noise. Class B rotor balancing is highly recommended in these applications. Installing a separate supply fan cooling may also be advisable.

Remote-controlled fan and brake (if fitted) must always be connected direct to mains power supply.

6.10 Permissible starts per hour, Z

The rating charts of brakemotors lend the permitted number of starts Z_0, based on 50% intermittence and for unloaded operation. The catalogue value represents the maximum number of starts per hour for the motor without exceeding the rated temperature for the insulation class F. To give a practical example for an application characterized by inertia J_c, drawing power P_r and requiring mean torque at start-up M_L the actual number of starts per hour for the motor can be calculated approximately through the following equation:

$$Z = \frac{Z_0 \cdot K_c \cdot K_d}{K_J} \qquad (02)$$

where:

$K_J = \frac{J_m + J_c}{J_m}$	inertia factor
$K_c = \frac{M_a - M_L}{M_a}$	torque factor
$K_d =$	load factor, see the following table

(F24)

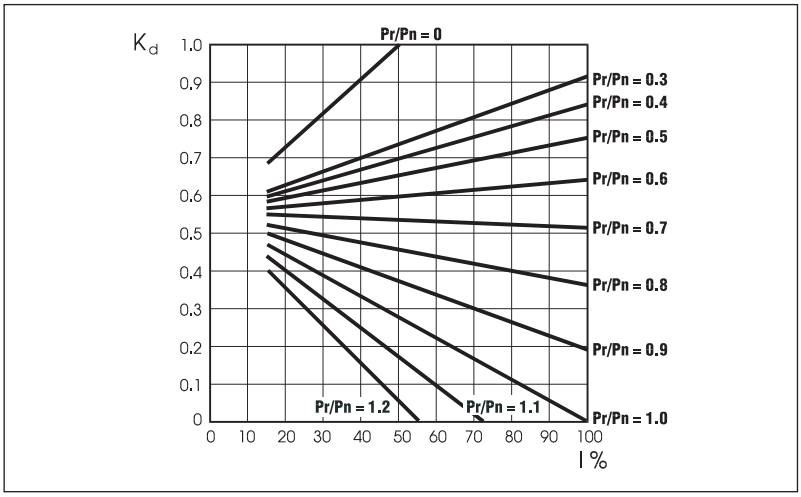

If actual starts per hour is within permitted value (Z) it may be worth checking that braking work is compatible with brake (thermal) capacity Wmax also given in the tables (F31), (F39) and dependent on the number of switches (c/h).

7 ASYNCHRONOUS BRAKE MOTORS

7.1 Operation

Versions with incorporated brake use spring-applied DC (FD option) or AC (FA options) brakes.
All brakes are designed to provide fail-safe operation, meaning that they are applied by spring-action in the event of power failure.

(F25)

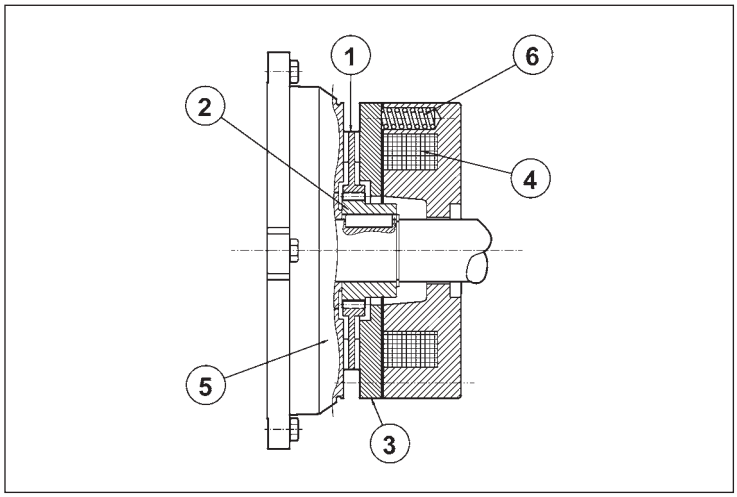

Key:
① brake disc
② disc carrier
③ pressure plate
④ brake coil
⑤ motor rear shield
⑥ brake springs

When voltage is interrupted, pressure springs push the armature plate against the brake disc. The disc becomes trapped between the armature plate and motor shield and stops the shaft from rotation. When the coil is energized, a magnetic field strong enough to overcome spring action attracts the armature plate, so that the brake disc – which is integral with the motor shaft – is released.

7.2 Most significant features

- High braking torques (normally $M_b \approx 2\ M_n$), braking torque adjustment.
- Steel brake disc with double friction lining (low-wear, asbestos-free lining).
- Hexagonal seat on motor shaft fan end (N.D.E.) for manual rotation (not compatible with options PS, RC, TC, U1, U2, EN1, EN2, EN3, EN4, EN5, EN6).
- Manual release lever (options **R** and **RM** for FD; option **R** for FA).
- Corrosion-proof treatment on all brake surfaces.
- Insulation class F.

8 DC BRAKE MOTORS TYPE BX_FD - BN_FD

Frame sizes: BX 80 ... BX 180L - BN 63 … BN 200L
BE motors may be available equipped with the FD brake, for further information please contact our Technical Department.

(F26)

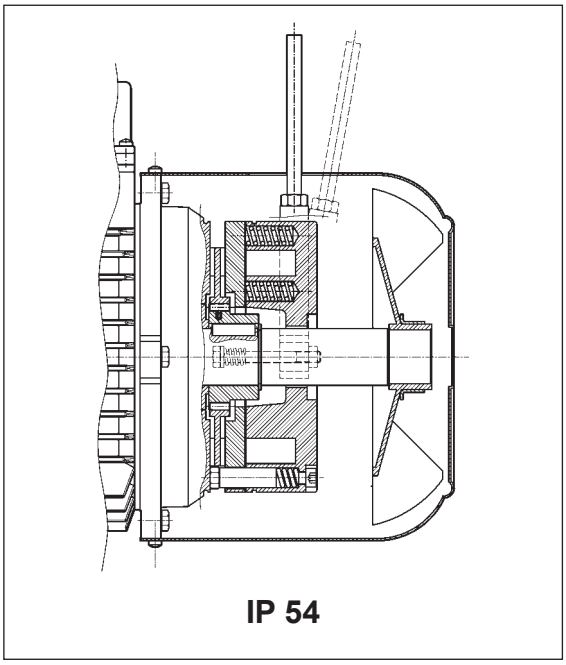

(F27)

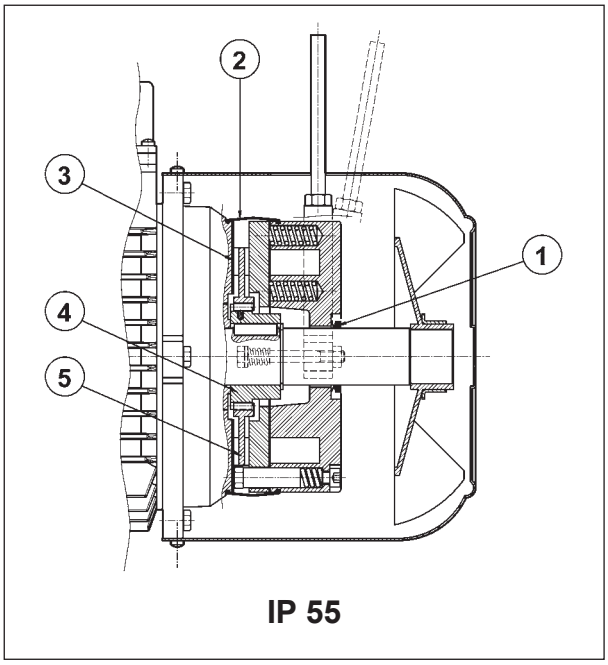

Direct current toroidal-coil electromagnetic brake bolted onto motor shield. Preloading springs provide axial positioning of magnet body.
Brake disc slides axially on steel hub shrunk onto motor shaft with anti-vibration device.
Brake torque factory setting is indicated in the corresponding motor rating charts. Braking torque may be modified by changing the type and/or number of springs.
At request, motors may be equipped with manual release lever with automatic return (**R**) or system for holding brake in the released position (**RM**).
See variant at paragraph “BRAKE RELEASE SYSTEMS” for available release lever locations.
FD brakes ensure excellent dynamic performance with low noise. DC brake operating characteristics may be optimized to meet application requirements by choosing from the various rectifier/power supply and wiring connection options available.
For applications involving lifting and/or high hourly energy dissipation, contact Bonfiglioli’s Technical Service.

8.1 Degree of protection

Standard protection class is IP54.
Brake motor FD is also available in protection class **IP55**, which mandates the following variants:

① V-ring at N.D.E. of motor shaft
② dust and water-proof rubber boot
③ stainless steel ring placed between motor shieldand brake disc
④ stainless steel hub
⑤ stainless steel brake disc

8.2 FD brake power supply

A rectifier accommodated inside the terminal box feeds the DC brake coil. Wiring connection across rectifier and brake coil is performed at the factory.
On all single-pole motors, rectifier is connected to the motor terminal board.
Rectifier standard power supply voltage VB is as indicated in the following table, regardless of mains frequency:

(F28)

2, 4, 6 P				**1 speed**
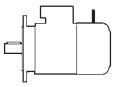	**BX_FD - BN_FD** V_{mot} ± 10% 3 ~	V_B ± 10% 1 ~	brake connected to terminal board power supply	separate power supply
BX 80…BX 132 **BN 63…BN 132**	230/400 V – 50 Hz	230 V	standard	specify **V_B SA** o **V_B SD**
BX 160…BX 180 **BN 160…BN 200**	400/690 V – 50 Hz	400 V	standard	specify **V_B SA** o **V_B SD**

Switch-pole motors feature a separate power supply line for the brake with rectifier input voltage V_B as indicated in the table below:

(F29)

2/4, 2/6, 2/8, 2/12, 4/6, 4/8 P				**2 speed**
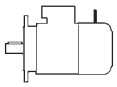	**BN_FD** V_{mot} ± 10% 3 ~	V_B ± 10% 1 ~	brake connected to terminal board power supply	separate power supply
BN 63…BN 132	400 V – 50 Hz	230 V	⊖	specify **V_B SA** o **V_B SD**

The diode half-wave rectifier (VDC ≈ 0,45 x VAC) is available in versions **NB, SB, NBR** e **SBR**, as detailed in the table below:

(F30)

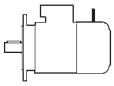	brake	~ / = standard	at request
BN 63	**FD 02**	**NB** 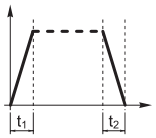	**SB** 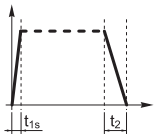
BN 71	**FD 03** **FD 53**		
BX 80 - BN 80	**FD 04**		**SBR** 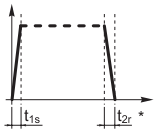
BX 90S - BN 90S	**FD 14**		
BX 90L - BN 90L	**FD 05**		**NBR** 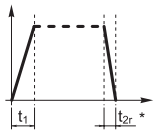
BX 100 - BN 100	**FD 15**		
BX 112 - BN 112	**FD 06S**	**SB** 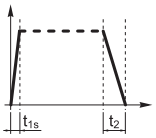	**SBR** 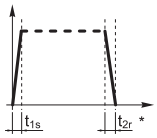
BX 132 **BN 132 - BN 160MR**	**FD 56** **FD 06** **FD 07**		
BX 160 **BN 160L - BN 180M**	**FD 08**		
BX 180 **BN 180L - BN 200M**	**FD 09**		

(*) $t_{2c} < t_{2r} < t_2$

Rectifier **SB** with electronic energizing control over-energizes the electromagnet upon power-up to cut brake release response time and then switches to normal half-wave operation once the brake has been released.

Use of the **SB** rectifier is mandatory in the event of:
- high number of operations per hour
- reduced brake release response time
- brake is exposed to extreme thermal stress

Rectifiers **NBR** or **SBR** are available for applications requiring quick brake intervention (braking condition reinstatement) response.
These rectifiers complement the **NB** and **SB** types as their electronic circuit incorporates a static switch that de-energizes the brake quickly in the event voltage is missing.
This arrangement ensures short brake release response time with no need for additional external wiring and contacts.
Optimum performance of rectifiers **NBR** and **SBR** is achieved with separate brake power supply.
Versions available: 230Vac ±10%, 400Vac ± 10%, 50/60 Hz (with power supply); 100Vdc ±10%, 180Vdc ± 10% (with SD option).

8.3 FD brake technical specifications

The table below reports the technical specifications of DC brakes FD.

(F31)

Brake	Brake torque M_b [Nm] springs			Release		Braking		W_{max} per brake operation [J]			W	P
				t_1	$t_{1\,s}$	t_2	t_{2c}					
	6	4	2	[ms]	[ms]	[ms]	[ms]	10 s/h	100 s/h	1000 s/h	[MJ]	[W]
FD02	–	3.5	1.75	30	15	80	9	4500	1400	180	15	17
FD03	5	3.5	1.75	50	20	100	12	7000	1900	230	25	24
FD53	7.5	5	2.5	60	30	100	12					
FD04 / **FD14**	15	10	5	80	35	140	15	10000	3100	350	30	33
FD05	40	26	13	130	65	170	20	18000	4500	500	50	45
FD15	40	26	13	130	65	170	20					
FD06S	60	40	20	–	80	220	25	20000	4800	550	70	55
FD56	–	75	37	–	90	250	20	29000	7400	800	80	65
FD06		100	50		100	250	20					
FD07	150	100	50	–	120	200	25	40000	9300	1000	130	65
FD08*	250	200	170	–	140	350	30	60000	14000	1500	230	100
FD09**	400	300	200	–	200	450	40	70000	15000	1700	230	120

* brake torque values obtained with 9, 7 and 6 springs, respectively

** brake torque values obtained with 12, 9 and 6 springs, respectively

t_1 = brake release time with half-wave rectifier
t_{1s} = brake release time with over-energizing rectifier
t_2 = brake engagement time with AC line interruption and separate power supply
t_{2c} = brake engagement time with AC and DC line interruption – Values for t_1, t_{1s}, t_2, t_{2c} indicated in the tab. (F30) are referred to brake set at maximum torque, medium air gap and rated voltage
W_{max} = max energy per brake operation
W = braking energy between two successive air gap adjustments
P_b = brake power absorption at 20 °C
M_b = static braking torque (±15%
s/h = starts per hour

The brake pad wear depends on the operating/ambient conditions (temperature, humidity, angular speed, specifica pressure); Therefore the declared wear rate must be considered as indicative.

8.4 FD brake connections

On standard single-pole motors, the rectifier is connected to the motor terminal board at the factory. For switch-pole motors and where a separate brake power supply is required, connection to rectifier must comply with brake voltage VB stated in motor name plate.
Because the load is of the inductive type, brake control and DC line interruption must use contacts from the usage class AC-3 to IEC 60947-4-1.

Table (F32) – Brake power supply from motor terminals and AC line interruption
Delayed stop time t_2 and function of motor time constants.
Mandatory when soft-start/stops are required.
Table (F33) – Brake coil with separate power supply and AC line interruption
Normal stop time independent of motor.
Achieved stop times t_2 are indicated in the table (F31).
Table (F34) – Brake coil power supply from motor terminals and AC/DC line interruption.
Quick stop with operation times t_{2c} as per table (F31).
Table (F35) – Brake coil with separate power supply and AC/DC line interruption.
Stop time decreases by values t_{2c} indicated in the table (F31).

The brake may be voltage supplied directly from the motor terminal box (from tab. F32 to tab. F35) only if the nominal voltage of the brake is the same as the smaller voltage of the motor.

(F32)

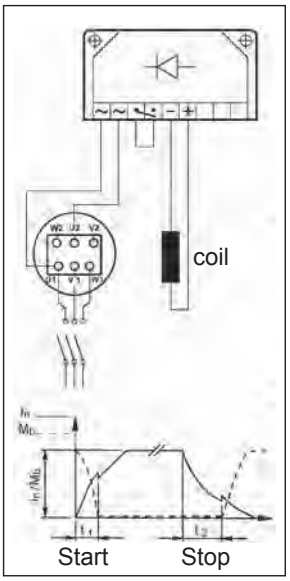

(F33)

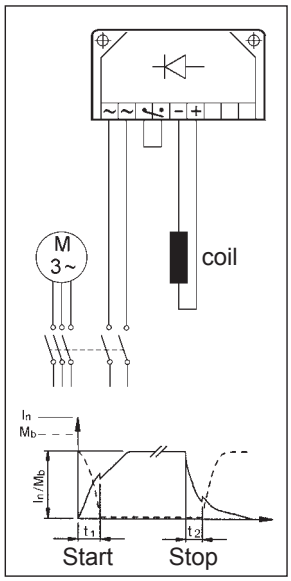

(F34)

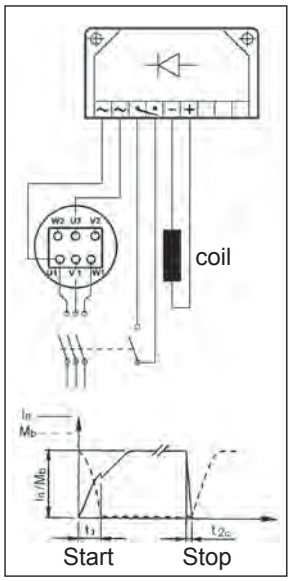

(F35)

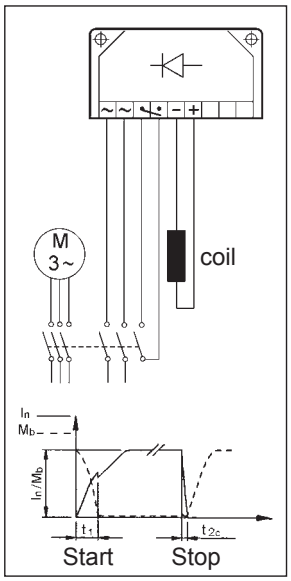

9 AC BRAKE MOTORS TYPE BX_FA - BN_FA

Frame sizes: BX 80 ... BX 160L - BN 63 … BN 180M

(F36)

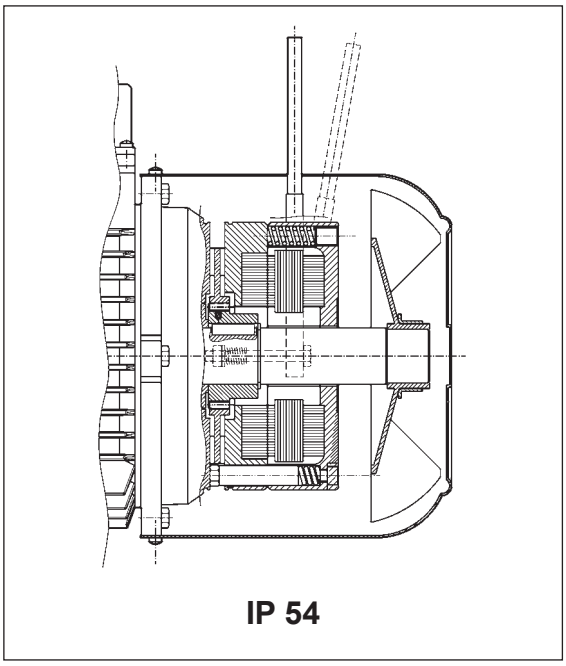

IP 54

(F37)

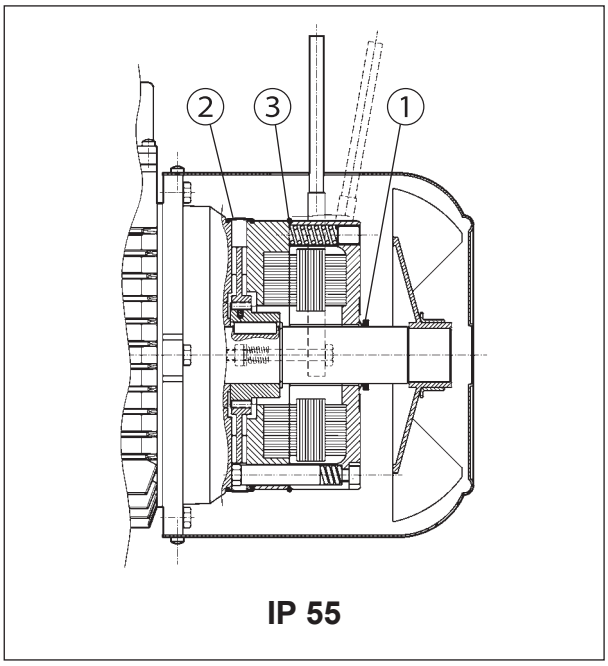

IP 55

Electromagnetic brake operates from three-phase alternated current power supply and is bolted onto conveyor shield. Preloading springs provide axial positioning of magnet body.
Steel brake disc slides axially on steel hub shrunk onto motor shaft with anti-vibration device.
Brake torque factory setting is indicated in the corresponding motor rating charts.
Spring preloading screws provide stepless braking torque adjustment.
Torque adjustment range is 30% $M_{bMAX} < M_b < M_{bMAX}$ (where M_{bMAX} is maximum braking torque as shown in tab. (F39).
Thanks to their high dynamic characteristics, FA brakes are ideal for heavy-duty applications as well as applications requiring frequent stop/starts and very fast response time.
Motors may be equipped with manual release lever with automatic return (R) at request. See variant at paragraph “BRAKE RELEASE SYSTEMS” for available release lever locations.
For applications involving lifting and/or high hourly energy dissipation, contact Bonfiglioli’s Technical Service.

9.1 Degree of protection

Standard protection class is IP54.
Brake motor FA is also available in protection class **IP55**, which mandates the following variants:

① V-ring at N.D.E. of motor shaft
② dust and water-proof rubber boot
③ O-ring

9.2 FA brake power supply

In single speed motors, power supply is brought to the brake coil direct from the motor terminal box. As a result, brake voltage and motor voltage are the same. In this case, brake voltage indication may be omitted in the designation.
Switch-pole motors and motors with separate brake power supply feature an auxiliary terminal board with 6 terminals for connection to brake line. In both cases, brake voltage indication in the designation is mandatory. The following table reports standard AC brake power supply ratings for single- and switch-pole motors:

(F38)

	BX 80…BX 132 BN 63…BN 132	BX160 BN 160…BN 180
single-pole motor	230Δ / 400Y V ±10% – 50 Hz	400Δ/ 690Y V ±10% – 50 Hz
	265Δ / 460Y ±10% - 60 Hz	460Y – 60 Hz

	BN 63…BN 132
switch-pole motors (separate power supply line)	230Δ / 400Y V ±10% – 50 Hz
	460Y - 60 Hz

Unless otherwise specified, standard brake power supply is 230Δ /400Y V - 50 Hz.

Special voltages in the 24…690 V, 50-60 Hz range are available at request.

9.3 Technical specifications of FA brakes

(F39)

Brake	Brake torque M_b [Nm]	Release t_1 [ms]	Braking t_2 [ms]	W_{max} [J] 10 s/h	100 s/h	1000 s/h	W [MJ]	P [VA]
FA 02	3.5	4	20	4500	1400	180	15	60
FA 03	7.5	4	40	7000	1900	230	25	80
FA 04	15	6	60	10000	3100	350	30	110
FA 14								
FA 05	40	8	90	18000	4500	500	50	250
FA 15								
FA 06S	60	16	120	20000	4800	550	70	470
FA 06	75	16	140	29000	7400	800	80	550
FA 07	150	16	180	40000	9300	1000	130	600
FA 08	250	20	200	60000	14000	1500	230	1200

M_b = max static braking torque (±15%)
t_1 = brake release time
t_2 = brake engagement time
W_{max} = max energy per brake operation (brake thermal capacity)
W = braking energy between two successive air gap adjustments
P_b = power drawn by brake at 20° (50 Hz)
s/h = starts per hour

NOTE
Values t_1 and t_2 in the table refer to a brake set at rated torque, medium air gap and rated voltage.

Bonfiglioli Riduttori

The brake pad wear depends on the operating/ambient conditions (temperature, humidity, angular speed, specifica pressure); Therefore the declared wear rate must be considered as indicative.

9.4 FA brake connections

The diagram below shows the wiring when brake is connected directly to same power supply of the motor:

(F40)

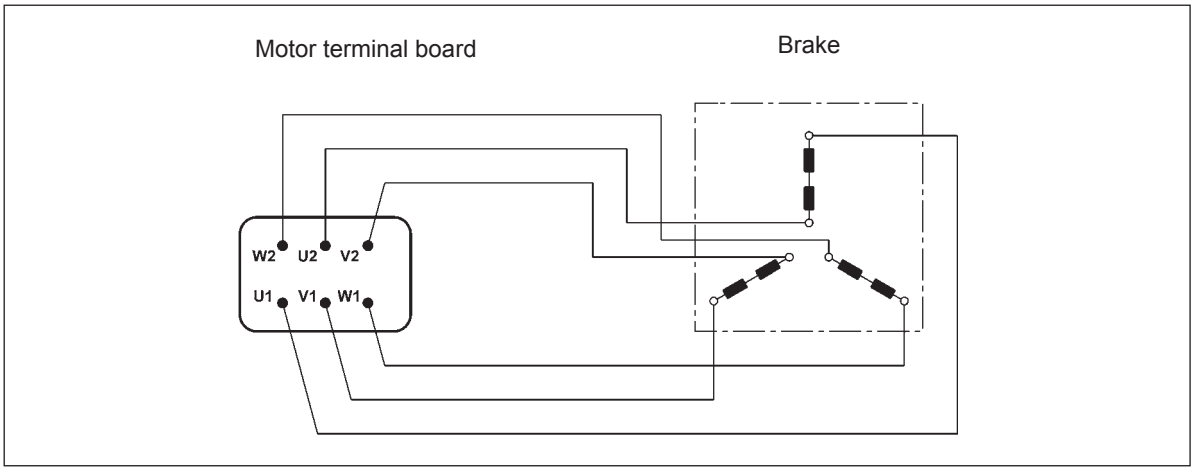

Switch-pole motors and, at request, single-pole motors with separate power supply are equipped with an auxiliary terminal board with 6 terminals for brake connection.
In this version, motors feature a larger terminal box. See diagram below:

(F41)

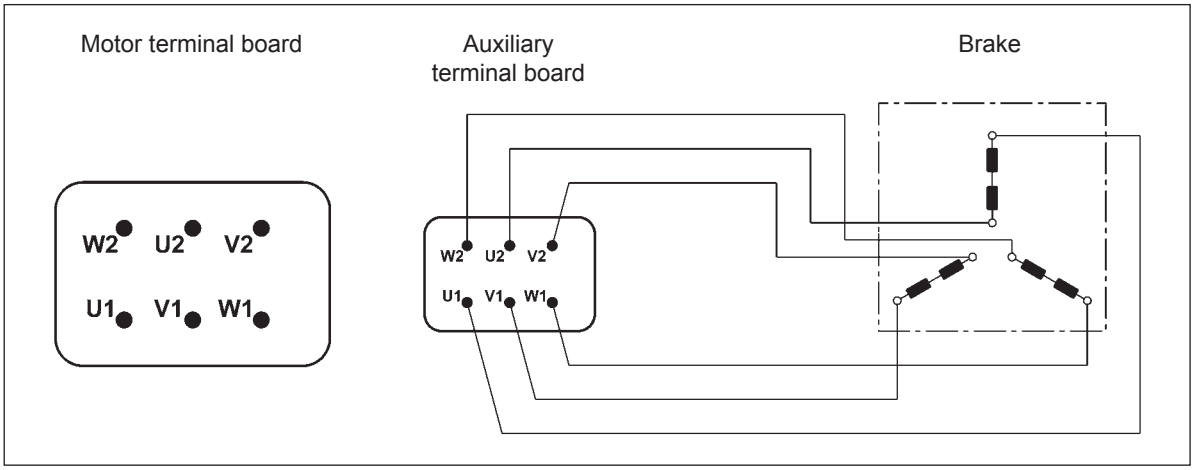

10 BRAKE RELEASE SYSTEMS

Spring-applied brakes type FD and FA may be equipped with optional manual release devices. These are typically used for manually releasing the brake before servicing any machine or plant parts operated by the motor.

R

(F42)

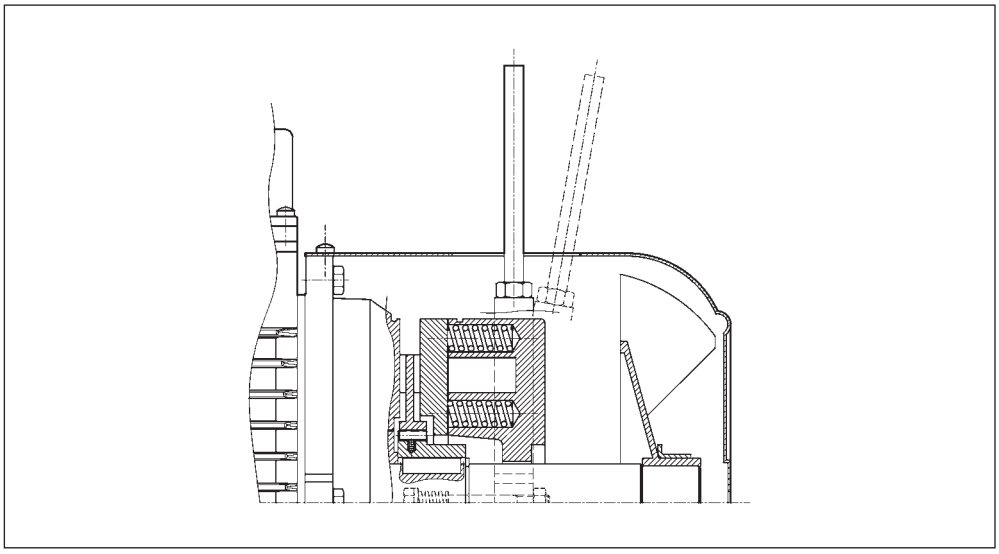

A return spring brings the release lever back in the original position.

RM

(F43)

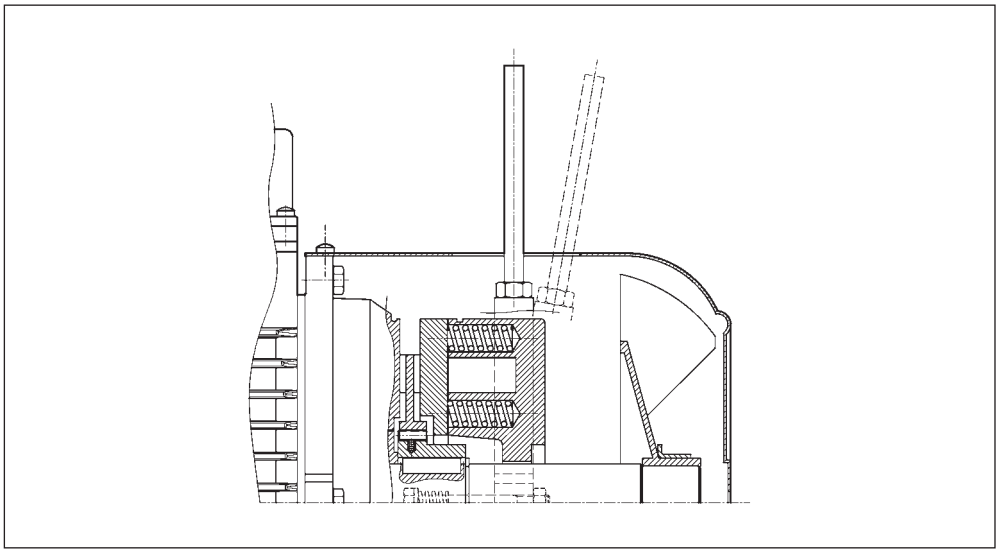

On brake motors type FD, if the option RM is specified, the release device may be locked in the ”release” position by tightening the lever until its end becomes engaged with a brake housing projection. The availability for the various disengagement devices is charted here below:

(F44)

	R	RM
BX_FD **BN_FD**	**BX 80...BX 180** **BN 63...BN 200**	**BX 80...BX 132** **BN 63 ... BN 132** ⛔ **FD07**
BX_FA **BN_FA**	**BX 80...BX 160** **BN 63...BN 180M**	⛔

10.1 Release lever orientation

Unless otherwise specified, the release lever is located 90° away from the terminal box – identified by letters [**AB**] in the diagram below – in a clockwise direction on both options **R** and **RM**.
Alternative lever positions [**AA**], [**AC**] and [**AD**] are also possible when the corresponding option is specified:

(F45)

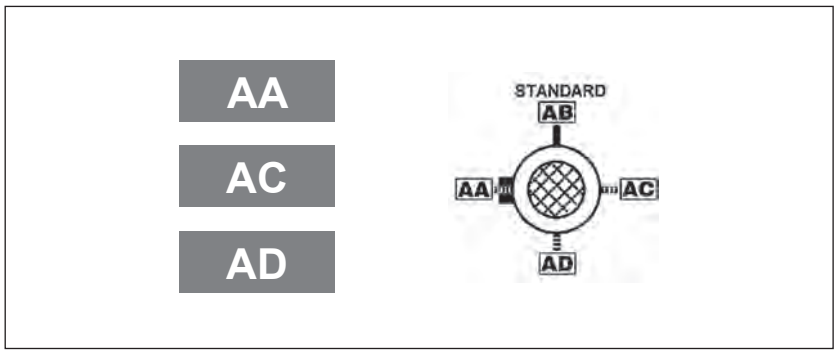

10.2 Separate brake supply

...SA

The brake coil is directly fed through an independent line, separately from the motor.
In this case the rated voltage for the coil must be specified, e.g.230SA. The option is applicable to all motors with brake type FD and FA.

...SD

The brake coil is directly fed with DC current and the rectifier is out of the scope for supply.
The rated voltage for the coil must be specified, e.g. 24SD.

11 OPTIONS

11.1 Soft-start / stop

F1

An optional flywheel - option F1 - is available for applications requiring soft starting or stopping. The flywheel's added inertia uses up kinetic energy during starting and returns it back during braking, thus catering for more progressive and gradual shock loads. The optional flywheel is available for brake motors type BN_FD with specific characteristics as detailed in the table below:

(F46)

Main data for flywheel of motore type: BN_FD		
	Fly-wheel weight [Kg]	**Fly-wheel inertia** [Kgm^2]
BN 63	0.69	0.00063
BN 71	1.13	0.00135
BN 80	1.67	0.00270
BN 90S - BN 90L	2.51	0.00530
BN 100	3.48	0.00840
BN 112	4.82	0.01483
BN 132S - BN 132M	6.19	0.02580

11.2 Capacitive filter

CF

An optional capacitive filter is available for brake motors type FD only. When the suitable capacitive filter is installed upstream of the rectifier (option CF), motors comply with the emission limits required by standard EN61000-6-3:2007" Electromagnetic Compatibility – Generic Emission Standard – Part 6-3: Residential, commercial and light industrial environment".

11.3 Thermal protective devices

In addition to the standard protection provided by the magneto-thermal device, motors can be supplied with built-in thermal probes to protect the winding against overheating caused, by insufficient ventilation or by an intermittent duty.
This additional protection should always be specified for servo-ventilated motors (IC416).

11.4 Thermistors

E3

These are semi-conductors having rapid resistance variation when they are close to the rated switch off temperature (150 °C). Variations of the R = f(T) characteristic are specified under DIN 44081, IEC 34-11 Standards. Positive temperature coefficient thermistors are normally used (also known as PTC "cold conductor resistors").
Thermistors cannot control relays directly and must be connected to a suitable disconnect device. Thus protected, three PTCs connected in series are installed in the winding, the terminals of which are located on the auxiliary terminal-board.

K1

The design characteristics of this sub-group of PTC thermistors allow them to be used as positive temperature coefficient sensors with variable resistance.
Functioning temperature range: 0°C ... +260°C.
Thermistors cannot control relays directly and must be connected to a suitable disconnect device.
Terminals (polarised) for 1 x KTY 84-130 are provided on an auxiliary terminal strip.

11.5 Bimetallic thermostates

D3

These types of protective devices house a bimetal disk. When the rated switch off temperature (150 °C) is reached, the disk switches the contacts from their initial rest position.
As temperature falls, the disk and the contacts automatically return to rest position.
Three bimetallic thermostates connected in series are usually employed, with normally closed contacts. The terminals are located on an auxiliary terminal-board.

11.6 Plug connector

CON

Three types of connectors (CON 1, CON 2, CON 3) are provided; they can be mounted in two different positions: right side of terminal box cover (C1D, C2D, C3D); left side of terminal box cover (C1S, C2S, C3S).
The option CON is applicable to single speed BN motors (2, 4, 6, 8 poles), and BX / BE motors on the sizes specified on the following table. All double speed motors are excluded.
The connectors CON 1 / CON 2 are available for BX, BE and BN motors without brake and for brakemotors equipped with DC brake type FD, for the motor sizes listed below.
The male connector (with pins) is mounted on the motor, the female connector is not provided.
With CON option, the winding connection is always Y.
With option U1 “forced ventilation”, the fan unit supply is available inside the separate terminal box fixed to fan cover.
With options EN1...EN6, the encoder connection is made by a cable not connected to the motor plug connector.
The CON option is not applicable to brakemotors equipped with AC brake type FA.
The CON option is not available when at least one of the next options are selected: the U2, CUS, IC.

Specifications

(F47)

Option	CON 1
Motor size	**BX 80 ... BX 112 / BE 80 ... BE 112 / BN 63 … BN 112**
Connector view	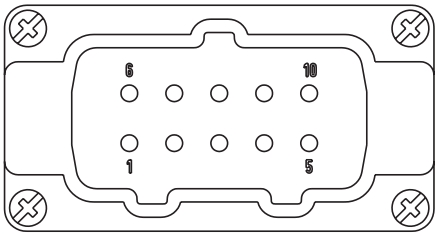
Type of connector	Harting Han 10ES
Housing	Han EMC 10B with 2 levers
Numbers of pins - nominal current	10 x 16A
Voltage	500 Vac
Contact connection	Screw terminals

(F48)

Option	CON 2
Motor size	**BX 80 ... BX 132 / BE 80 ... BE 132M / BN 63 … BN 160MR**
Connector view	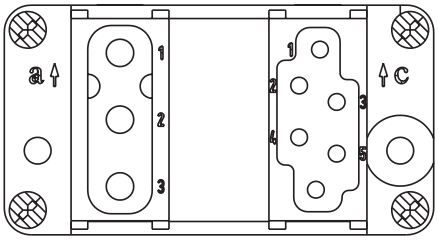
Type of connector	Harting Han Modular
Housing	Han EMC 10B with 2 levers
Module type	Module C + Module E + Module E
Numbers of pins - nominal current	3 x 36A / 6 x 16A
Voltage	500 Vac
Contact connection	Crimping contacts

(F49)

Option	CON 3
Motor size	**BX 80 ... BX 132M - BN 63 … BN 160MR**
Connector view	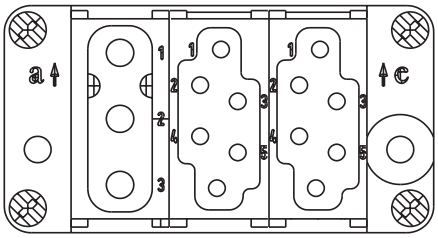
Type of connector	Harting Han Modular
Housing	Han EMC 10B with 2 levers
Module type	Module C + Module E + Module E
Numbers of pins - nominal current	3 x 36A / 6 + 6 x 16A
Voltage	500 Vac
Contact connection	Crimping contacts

(F50)

Connector orientation

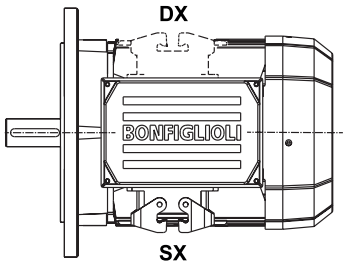

(F51)

Motors without brake dimensions

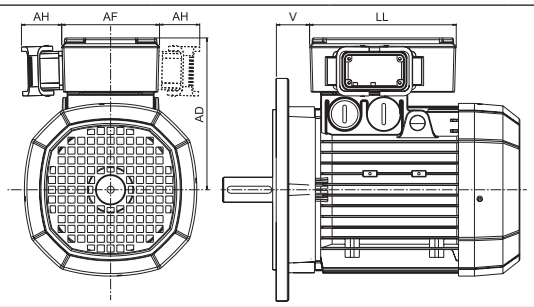

	AD (mm)	**AF** (mm)	**AH** (mm)	**LL** (mm)	**V** (mm)
BN 63	136	110	45	165	4.5
BN 71	149	110	45	165	15.5
BX 80 - BE 80 - BN 80	160	110	45	165	16.5
BX 90 - BE 90 - BN 90	162	110	45	165	31.5
BX 100 - BE 100 - BN 100	171	110	45	165	37.5
BX 112 - BE 112 - BN 112	186	110	45	165	39
BX 132 - BE 132 - BN 132	210	140	45	188	45.5
BN 160MR	210	140	45	188	161

(F52)

Motors with FD brake dimensions

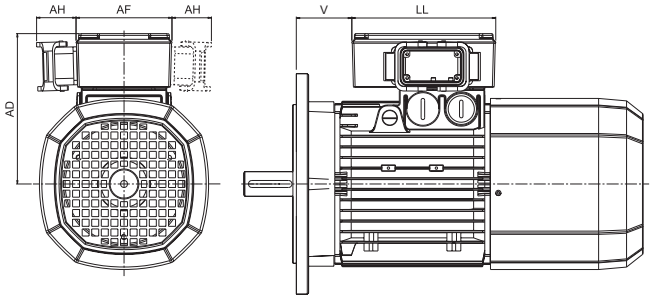

	AD (mm)	**AF** (mm)	**AH** (mm)	**LL** (mm)	**V** (mm)
BN 63	136	110	45	165	4.5
BN 71	149	110	45	165	1.5
BX 80 - BN 80	160	110	45	165	18.5
BX 90 - BN 90	162	110	45	165	39.5
BX 100 - BN 100	171	110	45	165	63.5
BX 112 - BN 112	186	110	45	165	75
BX 132 - BN 132	210	140	45	188	122
BN 160MR	210	140	45	188	161

11.7 Control of brake operation

MSW

The microswitch can be set in order to obtain from it a signal related to the attraction/release of anchor plate, or it can be set in order to give feedback when the air gap reaches the maximum value.
MSW option is available for brakes FD03...FD09.
The microswitch is provided with three lead wires (NC, NO, COM). The next figure shown the main components of the brake equipped with microswitch.

(F53)

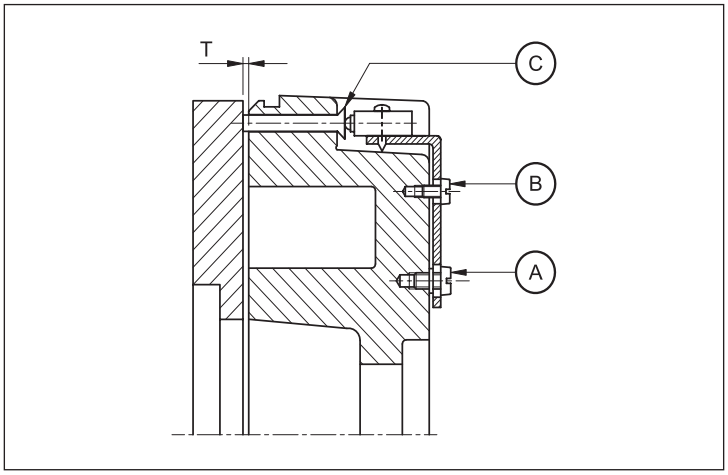

A: Plate fixing screws
B: Setting screws
C: Actuator control pin

11.8 Additional cable entry for brakemotors

IC

The terminal box cover of brakemotors BN 63 ... BN 160MR - BX 80 ... BX 132 is provided with two additional cable entry M16 x 1.5 (one cable entry per side).
The terminal box cover of brakemotors BN 160 ... BN 200 - BX 160 ... BX 180 is provided with an additional cable entry M16 x 1.5 next to the cable entry used for the brake.

11.9 Anti-condensation heaters

H1 **NH1**

Where an application involves high humidity or extreme temperature fluctuation, motors may be equipped with an anti-condensate heater.
A single-phase power supply is available in the auxiliary terminal board inside the main terminal box.
Values for the absorbed power are listed here below:

(F54)

	H1 1~ 230V ± 10% P [W]	NH1 1~ 115V ± 10% P [W]
BX 80 **BE 80** **BN 56 ... BN 80**	10	10
BX 90 ... BX 132 **BE 90 ... BE 132MB** **BN 90 ... BN 160MR**	25	25
BX 160, BX 180 **BE 160, BE 180** **BN 160, BN 200**	50	50

Warning!
Always remove power supply to the anti-condensante hea- ter before operating the motor.

11.10 Tropicalization

TP

When option **TP** is specified, motor windings receive additional protection for operation in high humidity and temperature conditions.

11.11 Second shaft extension

PS

This option is not compatible with variants RC, TC, U1, U2, EN1, EN2, EN3, EN4, EN5, EN6.
For shaft dimensions please see motor dimensions tables.

(F55)

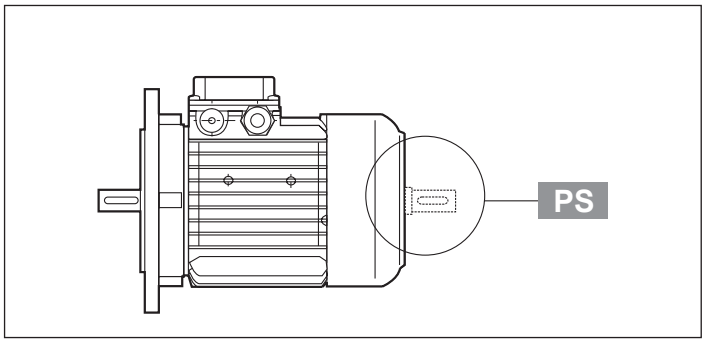

11.12 Rotor balancing

RV

Where low noise is a priority requirement, the option RV ensures reduced vibration in accordance with vibration class B.
The table below reports effective velocity of vibration for normal (A) and B grade balancing.

(F56)

Vibration level	Angular velocity n [min^{-1}]	Limits of the vibration velocity (mm/s) **BX 80 ≤ H ≤ BX 180L** **BE 80 ≤ H ≤ BE 180L** **BN 56 ≤ H ≤ BN 200**
A	600 < n < 3600	1.6
B	600 < n < 3600	0.70

Values are obtained from measurements on freely suspended motor during noload operation; tolerance ±10%.

11.13 Ventilation

Motors are cooled through outer air blow (IC 411 according to CEI EN 60034-6) and are equipped with a plastic radial fan, which operates in both directions.
Ensure that fan cover is installed at a suitable distance from the closest wall so to allow air circulation and servicing of motor and brake, if fitted.
On request, motors can be supplied with independently power-supplied forced ventilation system starting from BN 71, BE 80 and BX 80 size.
Motor is cooled by an axial fan with independent power supply and fitted on the fan cover (IC 416 cooling system).
This version is used in case of motor driven by inverter so that steady torque operation is possible even at low speed or when high starting frequencies are needed.
Brake motors of motors with rear shaft projection (PS option) are excluded.

This variant has two different models, called **U1** and **U2**, having the same longitudinal size. Longer side of fan cover (**DL**) is specified for both models in the table below. Overall dimension can be reckoned from motor size table.

(F57)

Extra length for servoventilated motors		
	Δ L_1	**Δ L_2**
BN 71	93	32
BX 80 - BE 80 - BN 80	127	55
BX 90 - BE 90 - BN 90	131	48
BX 100 - BE 100 - BN 100	119	28
BX 112 - BE 112 - BN 112	130	31
BX 132 - BE 132 - BN 132	161	51
BX 160 - BE 160 - BE 180	184	–

ΔL_1 = extra length to LB value of corresponding standard motor.

ΔL_2 = extra length to LB value of corresponding brake motor.
Only for BN motors.

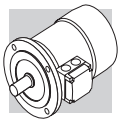

U1

Fan wiring terminals are housed in a separate terminal box.
In brake motors of size BX 132 ... BX 160 - BE 80 ... BE 160 - BN 71 ... BN 160MR, with **U1** model, the release lever cannot be positioned to AA.
The option is not applicable to motors compliant with the CSA and UL norms (option CUS).

(58)

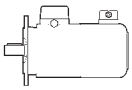	**V a.c.** ±10%	**Hz**	**P** [W]	**I** [A]
BN 71	1 ~ 230	50 / 60	22	0.12
BX 80 - BE 80 **BN 80**			22	0.12
BX 90 - BE 90 **BN 90**			40	0.30
BX 100 - BE 100 **BN 100**			50	0.25
BX 112 - BE 112 **BN 112**	3 ~ 230Δ / 400Y		50	0.26 / 0.15
BX 132 - BE 132 **BN 132 ... BN 160MR**			110	0.38 / 0.22
BX 160 - BE 160 **BN 160M ... BN 180M**		50	180	1.25 / 0.72
BX 180 - BE 180 **BN 180L ... BN 200L**			250	1.51 / 0.87

U2

Fan terminals are wired in the motor terminal box.
The **U2** option does not apply to motors BX/BE and to motors with option CUS (compliant to norms CSA and UL).

(59)

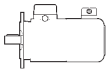	**V a.c.** ±10%	**Hz**	**P** [W]	**I** [A]
BN 71	1 ~ 230	50 / 60	22	0.12
BN 80			22	0.12
BN 90			40	0.30
BN 100			40	0.26 / 0.09
BN 112	3 ~ 230Δ / 400Y		50	0.26 / 0.15
BN 132 ... BN 160MR			110	0.38 / 0.22

11.14 Rain canopy

RC

The rain canopy protects the motor from dripping and avoids the ingress of solid bodies. It is recommended when motor is installed in a vertical position with the shaft downwards.
Relevant dimensions are indicated in the table below.
The drip cover is not compatible with variants PS, EN1, EN2, EN3, EN4, EN5, EN6.

(60)

	AQ	ΔV
BN 63	118	24
BN 71	134	27
BX 80 - BE 80 BN 80	152	25
BX 90 - BE 90 BN 90	168	30
BX 100 - BE 100 BN 100	190	28
BX 112 - BE 112 BN 112	211	32
BX 132 - BE 132 BN 132...BN 160MR	254	32
BX 160 - BE 160 BN 160M...BN 180M	302	36
BX 180 - BE 180 BN 180L...BN 200L	340	36

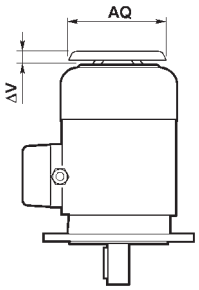

11.15 Textile canopy

TC

Option TC is a cover variant for textile industry environments, where lint may obstruct the fan grid and prevent a regular flow of cooling air.
This option is not compatible with variants EN1, EN2, EN3, EN4, EN5, EN.
Overall dimensions are the same as drip cover type RC.
TC option is not available for BX motors.

11.16 Feedback units

Motors may be combined with six different types of encoders to achieve feedback circuits.
Configurations with double-extended shaft (PS) and rain canopy (RC, TC) are not compatible with encoder installation.

EN1

Incremental encoder, V_{IN} = 5 V, line-driver output RS 422.

EN2

Incremental encoder, V_{IN} = 10-30 V, line-driver output RS 422.

EN3

Incremental encoder, V_{IN} = 12-30 V, push-pull output 12-30 V

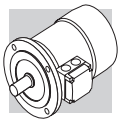

EN4

Encoder sin/cos, V_{IN} = 4.5-5.5 V, output Sinus $0.5V_{PP}$.

EN5

Absolute encoder singleturn, HIPERFACE® interface, V_{IN} = 7-12 V.

EN6

Absolute encoder multiturn, HIPERFACE® interface, V_{IN} = 7-12 V.

(F61)

		EN1	EN2	EN3	EN4	EN5	EN6
Interface		TTL/RS 422	TTL/RS 422	HTL/push-pull	Sinus 0.5 VPP	HIPERFACE®	HIPERFACE®
Power supply voltage	[V]	4...6	10...30	12...30	4.4...5.5	7...12	7...12
Output voltage	[V]	5	5	12...30	—	—	—
No-load operating current	[mA]	120	100	100	40	80	80
No. of pulses per revolution		1024					
Steps per revolution		—	—	—	—	15 bit	15 bit
Revolutions		—	—	—	—	—	12 bit
No. of signals		6 (A, B, Z + inverted signals)			6 (cos-, cos+, sin-, sin+, Z, $\overline{Z}$)	—	—
Max. output frequency	[kHz]	600			200		
Max. speed	[min^{-1}]	6000 (9000 min^{-1} for 10 s)					
Temperature range	[°C]	-30 ... +100					
Protection class		IP 65					

(F62)

EN_ + U1

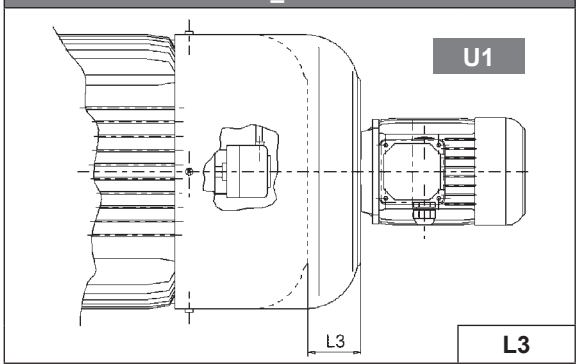

	L3
BX 160 - BE 160 - BN 160M...BN 180M	72
BX 160 - BE 180 - BN 180L...BN 200L	82
BX 160_FD - BN 160M_FD...BN 180M_FD	35
BX 180_FD - BN 180L_FD...BN 200L_FD	41

(F63)

EN1, EN2, EN3, EN4, EN5, EN6

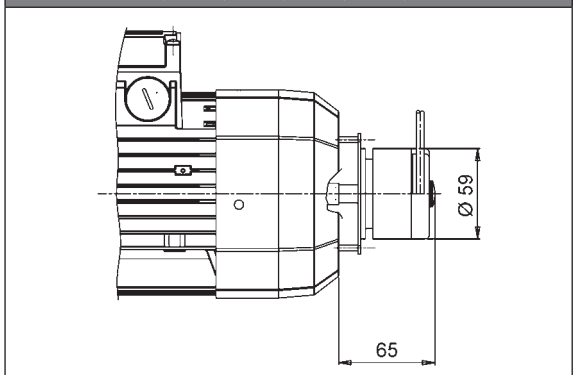

BX 80 ... BX 180L - BE 80 ... BE 180L
BN 63 ... BN 200L
BX 80_FD ... BX 180_FD - BN 63_FD ... BN 200L_FD
BX 80_FA ... BX 160_FA - BN 63_FA ... BN 200L_FA

If the encoder device (option EN_) is specified on motors BX 80 … BX 132 - BE 80 ... BE 132 - BN 71 … BN 160MR, along with the independent fan cooling (options U1, U2), the extra length of motor is coincident with that of the correspondent U1 and U2 execution.

11.17 Surface protection

C_

When no specific protection class is requested, the painted (ferrous) surfaces of motors are protected to at least corrosivity class C2 (UNI EN ISO 12944-2). For improved resistance to atmospheric corrosion, motors can be delivered with C3 and C4 surface protection.

(F64)

SURFACE PROTECTION	Typical environments	Maximum surface temperature	Corrosivity class according to UNI EN ISO 12944-2
C3	Urban and industrial environments with up to 100% relative humidity (medium air pollution)	120°C	C3
C4	Industrial areas, coastal areas, chemical plant, with up to 100% relative humidity (high air pollution)	120°C	C4

Motors with optional protection to class C3 or C4 are available in a choice of colours. If no specific colour is requested (see the “PAINTING” option) motors are finished in RAL 7042.
Motors can also be supplied with surface protection for corrosivity class C5 according to UNI EN ISO 12944-2. Contact our Technical Service for further details.

11.18 Painting

RAL

Gearboxes with optional protection to class C3 or C4 are available in the colours listed in the following table.

(F65)

PAINTING	Colour	RAL number
RAL7042*	Traffic Grey A	7042
RAL5010	Gentian Blue	5010
RAL9005	Jet Black	9005
RAL9006	White Aluminium	9006
RAL9010	Pure White	9010

* Gearboxes are supplied in this standard colour if no other colour is specified.

NOTE – “PAINTING” options can only be specified in conjunction with “SURFACE PROTECTION” options.

11.19 Certificates

ACM

Certificate of compliance of motors
The document certifies the compliance of the product with the purchase order and the construction in conformity with the applicable procedures of the Bonfiglioli Quality System.

CC

Inspection certificate
The document entails checking on order compliance, the visual inspection of external conditions and instrumental testing of the electrical characteristics in unloaded conditions. Units inspected are sampled within the shipping batch and marked individually.

12 TABLES OF MOTORS CORRELATION

12.1 50 Hz Motors

(F66)

pole		2		
Efficiency class		IE1	IE2	IE3
Pn [kW]	0.06			
	0.09			
	0.12			
	0.18	BN 63A 2		
	0.25	BN 63B 2		
	0.37	BN 71A 2		
	0.55	BN 71B 2		
	0.75	BN 71C 2	BE 80A 2	
		BN 80A 2		
	1.1	BN 80B 2	BE 80B 2	
	1.5	BN 90SA 2	BE 90SA 2	
	1.85	BN 90SB 2		
	2.2	BN 90L 2	BE 90L 2	
	3	BN 100L 2	BE 100L 2	
	4	BN 112M 2	BE 112M 2	
	5.5	BN 132SA 2	BE 132SA 2	
	7.5	BN 132SB 2	BE 132SB 2	
	9.2	BN 132M 2	BE 132MB 2	
	11	BN 160MR 2	BE 160MA 2	
		BN 160M 2		
	15	BN 160MB 2	BE 160MB 2	
	18.5	BN 160L 2	BE 160L 2	
	22	BN 180M 2		
	30	BN 200LA 2		

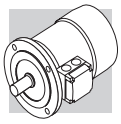

(F67)

pole		4		
Efficiency class		IE1	IE2	IE3
Pn [kW]	0.06	BN 56A 4		
	0.09	BN 56B 4		
	0.12	BN 63A 4		
	0.18	BN 63B 4		
	0.25	BN 63C 4		
		BN 71A 4		
	0.37	BN 71B 4		
	0.55	BN 71C 4		
		BN 80A 4		
	0.75	BN 80B 4	BE 80B 4	BX 80B 4
	1.1	BN 80C 4	BE 90S 4	BX 90S 4
		BN 90S 4		
	1.5	BN 90LA 4	BE 90LA 4	BX 90LA 4
	1.85	BN 90LB 4		
	2.2	BN 100LA 4	BE 100LA 4	BX 100LA 4
	3	BN 100LB 4	BE 100LB 4	BX 100LB 4
	4	BN 112M 4	BE 112M 4	BX 112M 4
	5.5	BN 132S 4	BE 132S 4	BX 132SB 4
	7.5	BN 132MA 4	BE 132MA 4	BX 132MA 4
	9.2	BN 132MB 4	BE 132MB 4	BX 160MA 4
	11	BN 160MR 4	BE 160M 4	BX 160MB 4
		BN 160M 4		
	15	BN 160L 4	BE 160L 4	BX 160L 4
	18.5	BN 180M 4	BE 180M 4	BX 180M 4
	22	BN 180L 4	BE 180L 4	BX 180L 4
	30	BN 200L 4		

(F68)

pole		6		
Efficiency class		IE1	IE2	IE3
Pn [kW]	0.06			
	0.09	BN 63A 6		
	0.12	BN 63B 6		
	0.18	BN 71A 6		
	0.25	BN 71B 6		
		BN 71C 6		
	0.37	BN 80A 6		
	0.55	BN 80B 6		
	0.75	BN 80C 6	BE 90S 6	
		BN 90S 6		
	1.1	BN 90L 6	BE 100M 6	
	1.5	BN 100LA 6	BE 100LA 6	
	1.85	BN 100LB 6		
	2.2	BN 112M 6	BE 112M 6	
	3	BN 132S 6	BE 132S 6	
	4	BN 132MA 6	BE 132MA 6	
	5.5	BN 132MB 6	BE 160MA 6	
	7.5	BN 160M 6	BE 160MB 6	
	9.2			
	11	BN 160L 6		
	15	BN 180L 6		
	18.5	BN 200LA 6		
	22			
	30			

12.2 60 Hz Motors

(F69)

pole		2		
Efficiency class		IE1	IE2	IE3
Pn [kW]	0.06			
	0.09			
	0.12			
	0.18	BN 63A 2		
	0.25	BN 63B 2		
	0.37	BN 71A 2		
	0.55	BN 71B 2		
	0.75	BN 71C 2	BE 80A 2	
		BN 80A 2		
	1.1	BN 80B 2	BE 80B 2	
	1.5	BN 90SA 2	BE 90SA 2	
	1.85	BN 90SB 2		
	2.2	BN 90L 2	BE 90L 2	
	3	BN 100L 2	BE 100L 2	
	3.7	BN 100LB 2		
	4	BN 112M 2	BE 112M 2	
	5.5	BN 132SA 2	BE 132SA 2	
	7.5	BN 132SB 2	BE 132SB 2	
	9.2	BN 132M 2	BE 132MB 2	
	11	BN 160MR 2	BE 160MA 2	
		BN 160M 2		
	15	BN 160MB 2	BE 160MB 2	
	18.5	BN 160L 2	BE 160L 2	
	22	BN 180M 2		
	30	BN 200LA 2		

(F70)

pole		4		
Efficiency class		IE1	IE2	IE3
Pn [kW]	0.06	BN 56A 4		
	0.09	BN 56B 4		
	0.12	BN 63A 4		
	0.18	BN 63B 4		
	0.25	BN 63C 4		
		BN 71A 4		
	0.37	BN 71B 4		
	0.55	BN 71C 4		
		BN 80A 4		
	0.75	BN 80B 4	BE 80B 4	BX 90SR 4
	1.1	BN 80C 4	BE 90S 4	BX 90S 4
		BN 90S 4		
	1.5	BN 90LA 4	BE 90LA 4	BX 90LA 4
	1.85	BN 90LB 4		
	2.2	BN 100LA 4	BE 100LA 4	BX 100LA 4
	3	BN 100LB 4	BE 100LB 4	BX 100LB 4
	3.7	BN 100LC 4		BX 112M 4
	4	BN 112M 4	BE 112M 4	
	5.5	BN 132S 4	BE 132SB 4	BX 132SB 4
	7.5	BN 132MA 4	BE 132MA 4	BX 132MA 4
	9.2	BN 132MB 4	BE 132MB 4	BX 160MA 4
	11	BN 160MR 4	BE 160M 4	BX 160MB 4
		BN 160M 4		
	15	BN 160L 4	BE 160L 4	BX 160L 4
	18.5	BN 180M 4	BE 180M 4	BX 180M 4
	22	BN 180L 4	BE 180L 4	BX 180L 4
	30	BN 200L 4		

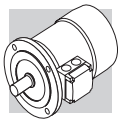

(F71)

pole		6		
Efficiency class		IE1	IE2	IE3
Pn [kW]	0.06			
	0.09	BN 63A 6		
	0.12	BN 63B 6		
	0.18	BN 71A 6		
	0.25	BN 71B 6		
		BN 71C 6		
	0.37	BN 80A 6		
	0.55	BN 80B 6		
	0.75	BN 80C 6	BE 90S 6	
		BN 90S 6		
	1.1	BN 90L 6	BE 100M 6	
	1.5	BN 100LA 6	BE 100LA 6	
	1.85	BN 100LB 6		
	2.2	BN 112M 6	BE 112M 6	
	3	BN 132S 6	BE 132S 6	
	3,7	BN 132MA 6		
	4		BE 132MA 6	
	5.5	BN 132MB 6	BE 160MA 6	
	7.5	BN 160M 6	BE 160MB 6	
	9.2			
	11	BN 160L 6		
	15	BN 180L 6		
	18.5	BN 200LA 6		
	22			
	30			

4 P	1500 min^{-1} - S1	50 Hz - IE3

P_n kW			n min^{-1}	M_n Nm	In 400V A	η% 100%	η% 75%	η% 50%	cos φ	I_s/I_n	M_s/M_n	M_a/M_n	KVA code	J_m x 10^{-4} kgm^2	IM B5 Kg	d.c. brake FD Mod	d.c. brake FD M_b Nm	d.c. brake FD J_m x 10^{-4} kgm^2	d.c. brake FD IM B5 Kg	a.c. brake FA Mod	a.c. brake FA M_b Nm	a.c. brake FA J_m x 10^{-4} kgm^2	a.c. brake FA IM B5 Kg
0.75	**BX 80B**	**4**	1425	5.0	1.61	82.5	83.9	83.2	0.81	6.5	2.0	1.8	J	35	16	**FD 04**	15	37	19.9	**FA 04**	15	37	19.8
1.1	**BX 90S**	**4**	1425	7.4	2.44	84.1	84.1	82.0	0.77	6.9	3.4	2.2	J	27	16	**FD 14**	15	29	20.2	**FA 14**	15	29	20.1
1.5	**BX 90LA**	**4**	1420	10.1	3.3	85.3	86.2	84.9	0.78	6.3	3.1	1.9	J	31	17	**FD 05**	26	35	23	**FA 05**	26	35	23.7
2.2	**BX 100LA**	**4**	1445	14.5	5.1	86.7	86.2	84.0	0.72	7.2	3.6	2.4	K	58	24	**FD 15**	40	62	31	**FA 15**	40	62	31
3	**BX 100LB**	**4**	1445	19.8	6.7	87.7	87.7	86.0	0.74	7.6	3.9	2.6	K	73	29	**FD 15**	40	77	36	**FA 15**	40	77	36
4	**BX 112M**	**4**	1445	26	8.1	88.6	88.9	87.6	0.8	8.1	3.8	2.5	J	130	38	**FD 06S**	60	139	48	**FA 06S**	60	139	50
5.5	**BX 132SB**	**4**	1460	36	10.6	89.6	89.2	88.8	0.83	8.2	3.6	2.3	J	310	57	**FD 56**	75	320	70	**FA 06**	75	320	71
7.5	**BX 132MA**	**4**	1460	49	15.0	90.4	90.9	90.2	0.80	8.4	3.8	2.5	K	360	67	**FD 06**	100	370	80	**FA 07**	100	370	85
9.2	**BX 160MA**	**4**	1465	60	17.8	91.0	92.1	91.7	0.82	7.9	3.6	2.1	J	650	95	**FD 08**	170	725	125	**FA 08**	170	725	124
11	**BX 160MB**	**4**	1465	72	20.5	91.4	92.9	92.5	0.84	7.8	3.4	1.9	J	780	110	**FD 08**	170	855	140	**FA 08**	170	855	139
15	**BX 160L**	**4**	1465	98	28.1	92.1	93.2	92.6	0.82	9.0	4.1	2.3	K	890	121	**FD 08**	200	965	151	**FA 08**	200	965	150
18.5	**BX 180M**	**4**	1480	119	32.9	92.6	94.1	93.1	0.85	11.3	2.6	2.3	M	1560	155	**FD 09**	300	1760	195				
22	**BX 180L**	**4**	1475	142	38.2	93.0	93.6	92.8	0.88	10.2	2.5	2.0	L	1660	163	**FD 09**	300	1860	203				

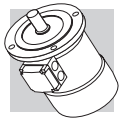

4 P	1800 min^{-1} - S1	60 Hz - IE3

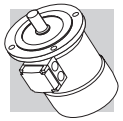

															d.c. brake FD				a.c. brake FA			
P_n kW		n min^{-1}	M_n Nm	In 400V A	η% 100%	η% 75%	η% 50%	cos φ	I_s/I_n	M_s/M_n	M_a/M_n	KVA code	J_m x 10^{-4} kgm^2	IM B5 Kg	Mod	M_b Nm	J_m x 10^{-4} kgm^2	IM B5 Kg	Mod	M_b Nm	J_m x 10^{-4} kgm^2	IM B5 Kg
0.75	**BX 90SR 4**	1755	4.1	1.48	85.5	86.4	83.9	0.73	8.0	3.7	2.5	L	27	16	**FD 14**	15	29	20.2	**FA 14**	15	29	20.1
1.1	**BX 90S 4**	1740	6.0	2.15	86.5	85.9	83.0	0.74	8.2	4.1	2.8	K	27	16	**FD 14**	15	29	20.2	**FA 14**	15	29	20.1
1.5	**BX 90LA 4**	1735	8.3	2.91	86.5	86.5	84.4	0.75	7.4	3.6	2.5	K	31	17	**FD 05**	26	35	23	**FA 05**	26	35	23.7
2.2	**BX 100LA 4**	1760	11.9	4.4	89.5	88.6	86.2	0.71	9.9	4.8	3.6	N	73	29	**FD 15**	40	77	36	**FA 15**	40	77	36
3	**BX 100LB 4**	1750	16.4	5.9	89.5	88.9	86.7	0.71	9.1	4.4	3.3	M	73	29	**FD 15**	40	77	36	**FA 15**	40	77	36
3.7	**BX 112M 4**	1760	20	6.7	89.5	89.5	89.1	0.77	10.4	4.7	3.4	M	130	38	**FD 06S**	60	139	48	**FA 06S**	60	139	50
5.5	**BX 132SB 4**	1770	30	9.9	91.7	92.0	90.2	0.76	10.7	5.1	4.6	N	410	77	**FD 56**	75	420	90	**FA 06**	75	420	91
7.5	**BX 132MA 4**	1770	41	13.4	91.7	91.3	89.7	0.76	11.0	4.9	4.4	N	410	77	**FD 06**	100	420	90	**FA 07**	100	420	95
9.2	**BX 160MA 4**	1770	50	15.6	92.4	92.5	91.6	0.8	9.1	4.1	2.6	L	650	95	**FD 08**	170	725	125	**FA 08**	170	725	124
11	**BX 160MB 4**	1770	59	18.2	92.4	92.9	92.0	0.82	9.3	4.0	2.4	L	780	110	**FD 08**	170	855	140	**FA 08**	170	855	139
15	**BX 160L 4**	1770	81	24.5	93.0	93.5	92.5	0.81	10.9	4.8	2.8	M	890	121	**FD 08**	200	965	151	**FA 08**	200	965	150
18.5	**BX 180M 4**	1780	99	28.6	93.6	94.5	93.2	0.85	13.0	2.9	2.7	N	1560	155	**FD 09**	300	1760	195				
22	**BX 180L 4**	1775	118	33.1	93.6	94.2	93.1	0.87	11.5	2.8	2.4	M	1660	163	**FD 09**	300	1860	203				

14 MOTORS DIMENSIONS BX

I 3

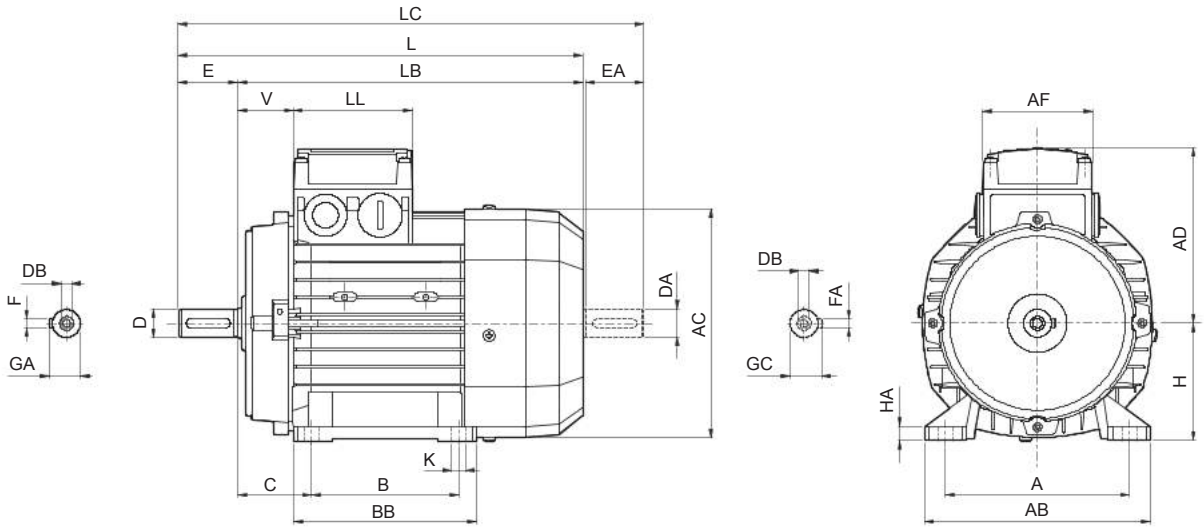

	Shaft					Housing						Motor									
	D DA	E EA	DB	GA GC	F FA	B	A	HA	BB	AB	K	C	H	AC	L	LB	LC	AD	AF	LL	V
BX 80 B	19 14(1)	40 30(1)	M6 M5(1)	21.5 16(1)	6 5(1)	100	125	8	124	153	10	50	80	156	320	280	351	119	74	80	38
BX 90 S	24 19(1)	50 40(1)	M8 M6(1)	27 21,5 (1)	8 6(1)		140		155	174		56	90	176	326	276	368	133	98	98	44
BX 90 LA						125											378				
BX 100 LA	28 24(1)	60 50(1)	M10 M8(1)	31 27(1)	8 8(1)	140	160	10	175	192	12	63	100	195	410	350	462	142			50
BX 100 LB																					
BX 112 M							190			224		70	112	219	430	370	482	157			52
BX 132 SB	38 28(1)	80 60(1)	M12 M10(1)	41 31(1)	10 81)	140	216	12	218	254	12	89	132	258	493	413	556	193	118	118	58
BX 132 MA						178									528	448	591				
BX 160 MA	42 38(1)	110 80(1)	M16 M12(1)	45 41(1)	12 10(1)	210	254	25	264	319	14.5	108	160	310	596	486	680	245	187	187	51
BX 160 MB						254			304						640	530	724				
BX 160 L																					
BX 180 M	48 42(1)	110 110(1)	M16 M16(1)	51.5 45(1)	14 12(1)	241	279	26	291	359	14	121	180	348	708	598	823	261			52
BX 180 L						279			329												

N.B.:
1) These values refer to the rear shaft end (PS).

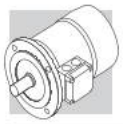

I

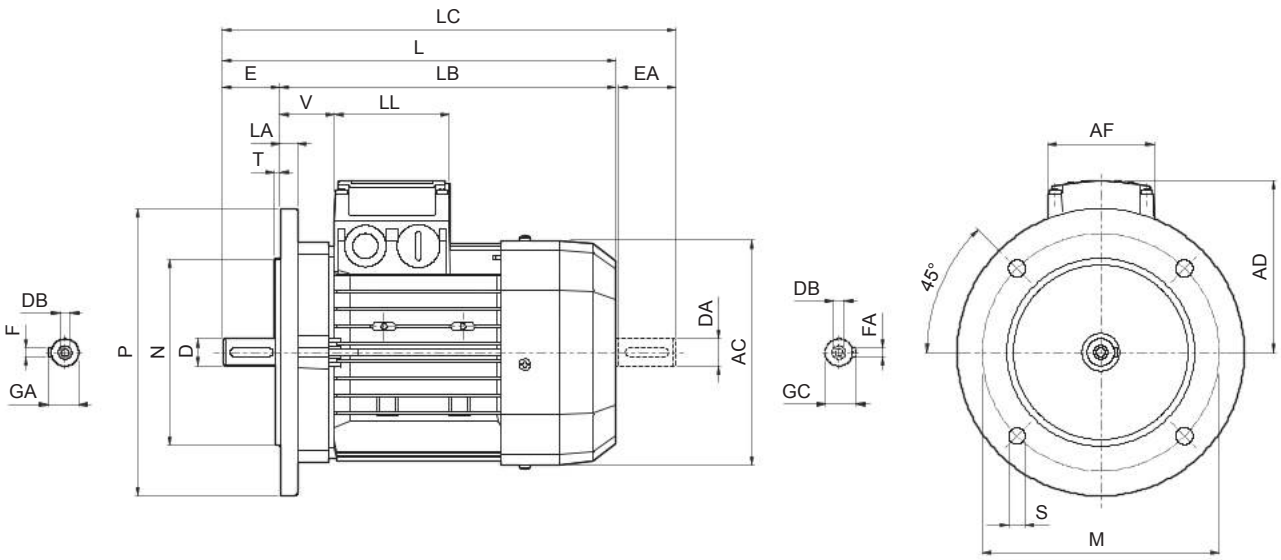

	Shaft					Flange						Motor							
	D DA	**E EA**	**DB**	**GA GC**	**F FA**	**M**	**N**	**P**	**S**	**T**	**LA**	**AC**	**L**	**LB**	**LC**	**AD**	**AF**	**LL**	**V**
BX 80 B	19 14(1)	40 30(1)	M6 M5(1)	21.5 16(1)	6 5(1)	165	130	200	11.5	3.5	11.5	156	320	280	351	119	74	80	38
BX 90 S	24 19(1)	50 40(1)	M8 M6(1)	27 21.5 (1)	8 6(1)							176	326	276	368	133	98	98	44
BX 90 LA																			
BX 100 LA	28 24(1)	60 50(1)	M10 M8(1)	31 27(1)	8 8(1)	215	180	250	14	4	14	195	410	350	462	142			50
BX 100 LB																			
BX 112 M											15	219	430	370	482	157			52
BX 132 SB	38 28(1)	80 60(1)	M12 M10(1)	41 31(1)	10 8(1)	265	230	300			20	258	493	413	556	193	118	118	58
BX 132 MA													528	448	591				
BX 160 MA	42 38(1)	110 80(1)	M16 M12(1)	45 41(1)	12 10(1)	300	250	350	18.5	5	15	310	596	486	680	245	187	187	51
BX 160 MB													640	530	724				
BX 160 L																			
BX 180 M	48 42(1)	110 110(1)	M16 M16(1)	51.5 45(1)	14 12(1)						18	348	708	598	823	261			52
BX 180 L																			

N.B.:
1) These values refer to the rear shaft end (PS).

I 1

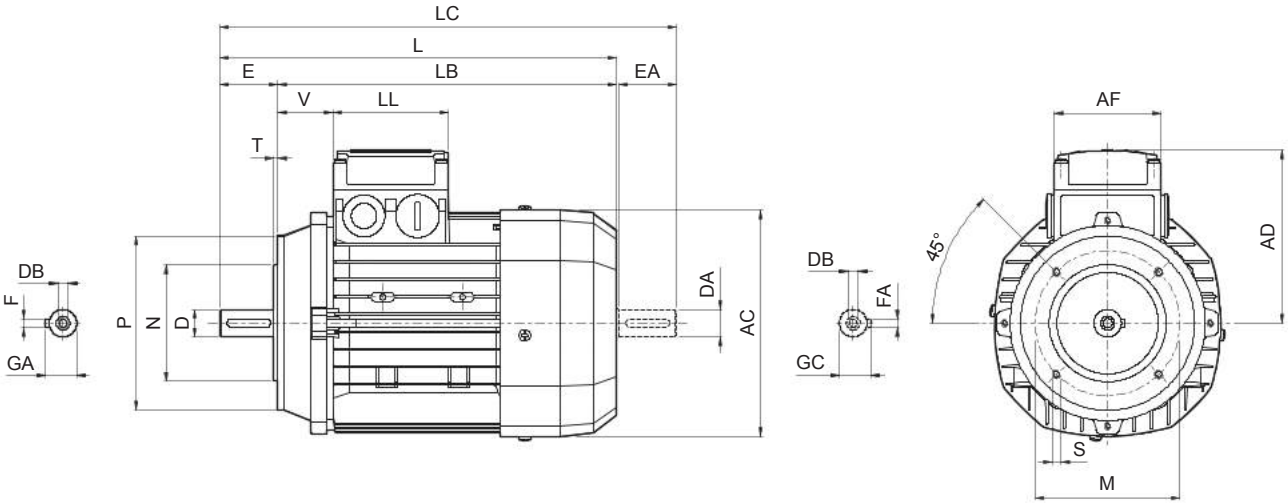

	Shaft					Flange					Motor							
	D DA	**E EA**	**DB**	**GA GC**	**F FA**	**M**	**N**	**P**	**S**	**T**	**AC**	**L**	**LB**	**LC**	**AD**	**AF**	**LL**	**V**
BX 80 B	19 14(1)	40 30(1)	M6 M5(1)	21.5 16(1)	6 5(1)	100	80	120	M6	3	156	320	280	351	119	74	80	38
BX 90 S	24 19(1)	50 40(1)	M8 M6(1)	27 21.5 (1)	8 6(1)	115	95	140	M8		176	326	276	368	133	98	98	44
BX 90 LA																		
BX 100 LA	28 24(1)	60 50(1)	M10 M8(1)	31 27(1)	8 8(1)	130	110	160		3.5	195	410	350	462	142			50
BX 100 LB																		
BX 112 M											219	430	370	482	157			52
BX 132 SB	38 28(1)	80 60(1)	M12 M10(1)	41 31(1)	10 8(1)	165	130	200	M10	4	258	493	413	556	193	118	118	58
BX 132 MA												528	448	591				

N.B.:
1) These values refer to the rear shaft end (PS).

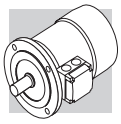

I 3

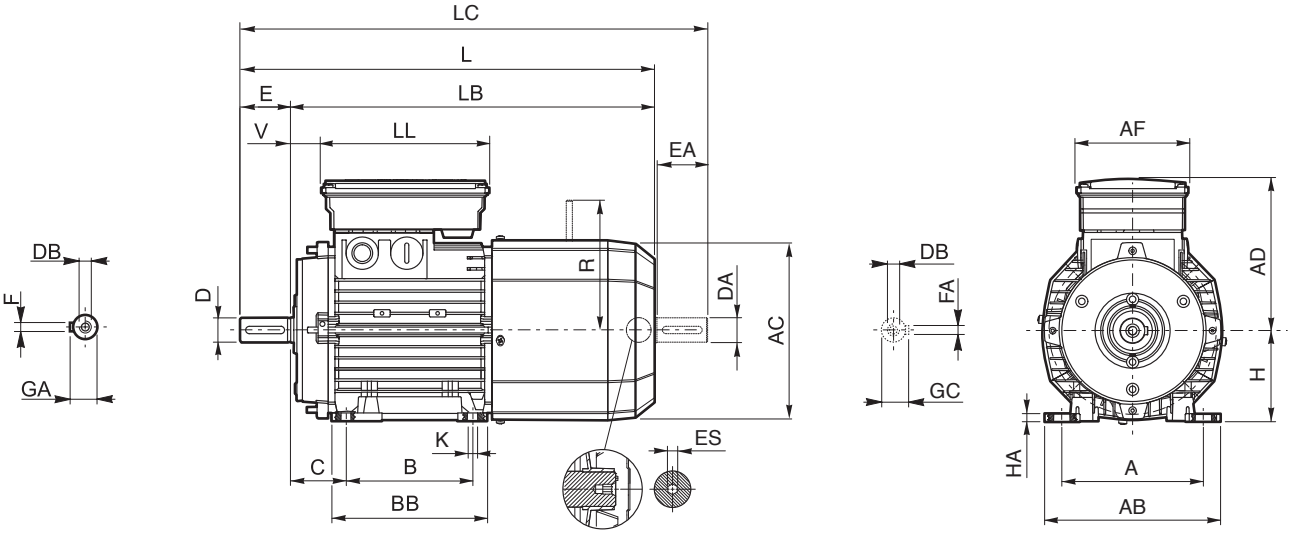

	Shaft					Housing						Motor												
	D DA	E EA	DB	GA GC	F FA	B	A	HA	BB	AB	K	C	H	AC	L	LB	LC	AD	AF	LL	V	R FD	R FA	ES (2)
BX 80 B	19 14(1)	40 30(1)	M6 M5(1)	21.5 16(1)	6 5(1)	100	125	8	124	153	10	50	80	156	392	352	423	143	98	133	25	129	134	5
BX 90 S	24 19(1)	50 40(1)	M8 M6(1)	27 21.5 (1)	8 6(1)	100	140	8	155	174	10	56	90	176	410	360	452	146	110	165	32	129	134	6
BX 90 LA						125	140	8	155	174	10	56	90	176	410	360	452	146	110	165	32	160	160	6
BX 100 LA	28 24(1)	60 50(1)	M10 M8(1)	31 27(1)	8 8(1)	140	160	10	175	192	12	63	100	195	502	442	554	155	110	165	37	160	160	6
BX 100 LB						140	160	10	175	192	12	63	100	195	502	442	554	155	110	165	37	160	160	6
BX 112 M						140	190	10	175	224	12	70	112	219	527	467	579	170	110	165	39	199	198	6
BX 132 SB	38 28(1)	80 60(1)	M12 M10(1)	41 31(1)	10 8(1)	140	216	12	218	254	12	89	132	258	603	523	667	210	140	188	46	204	200	6
BX 132 MA						178	216	12	218	254	12	89	132	258	627	547	690	210	140	188	46	204	226	6
BX 160 MA	42 38(1)	110 80(1)	M16 M12(1)	45 41(1)	12 10(1)	210	254	25	264	319	14.5	108	160	310	596	486	680	245	187	187	51	266	247	—
BX 160 MB						254	254	25	304	319	14.5	108	160	310	640	530	724	245	187	187	51	266	247	—
BX 160 L						254	254	25	304	319	14.5	108	160	310	640	530	724	245	187	187	51	266	247	—
BX 180 M	48 42(1)	110 110(1)	M16 M16(1)	51.5 45(1)	14 12(1)	241	279	26	291	359	14	121	180	348	866	598	823	261	187	187	52	305	—	—
BX 180 L						279	279	26	329	359	14	121	180	348	866	598	823	261	187	187	52	305	—	—

N.B.:
1) These values refer to the rear shaft end (PS).
2) “ES” hexagon is not present with PS option

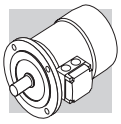

I

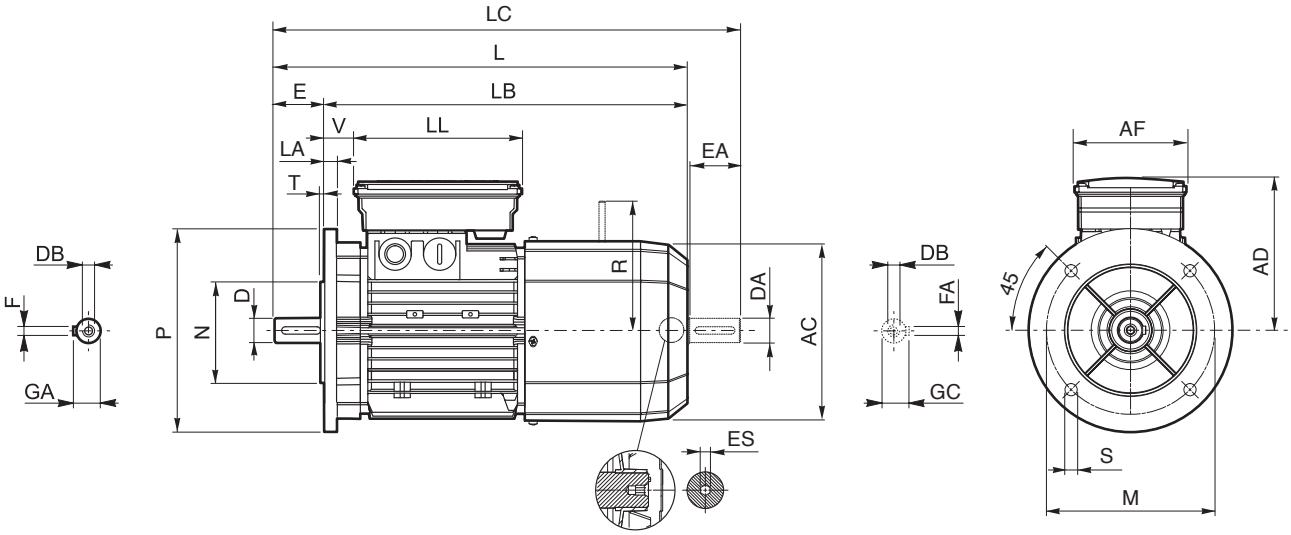

	Shaft					Housing						Motor										
	D DA	E EA	DB	GA GC	F FA	M	N	P	S	T	LA	AC	L	LB	LC	AD	AF	LL	V	R FD	R FA	ES (2)
BX 80 B	19 14(1)	40 30(1)	M6 M5(1)	21.5 16(1)	6 5(1)	165	130	200	11.5	3.5	11.5	156	392	352	423	143	98	133	25	129	134	5
BX 90 S	24 19(1)	50 40(1)	M8 M6(1)	27 21.5 (1)	8 6(1)							176	410	360	452	146	110	165	32	160	160	6
BX 90 LA																						
BX 100 LA	28 24(1)	60 50(1)	M10 M8(1)	31 27(1)	8 8(1)	215	180	250	14	4	14	195	502	442	554	155			37			
BX 100 LB																						
BX 112 M											15	219	527	467	579	170			39	199	198	
BX 132 SB	38 28(1)	80 60(1)	M12 M10(1)	41 31(1)	10 8(1)	265	230	300			16	258	603	523	667	210	140	188	46	204	200	
BX 132 MA													627	547	690						226	
BX 160 MA	42 38(1)	110 80(1)	M16 M12(1)	45 41(1)	12 10(1)	300	250	350	18.5	5	15	310	736	626	820	245	187	187	51	266	247	—
BX 160 MB													780	670	864							
BX 160 L																						
BX 180 M	48 42(1)	110 110(1)	M16 M16(1)	51.5 45(1)	14 12(1)						18	348	866	756	981	261			52	305	—	
BX 180 L																						

N.B.:
1) These values refer to the rear shaft end (PS).
2) “ES” hexagon is not present with PS option

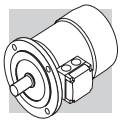

I 1

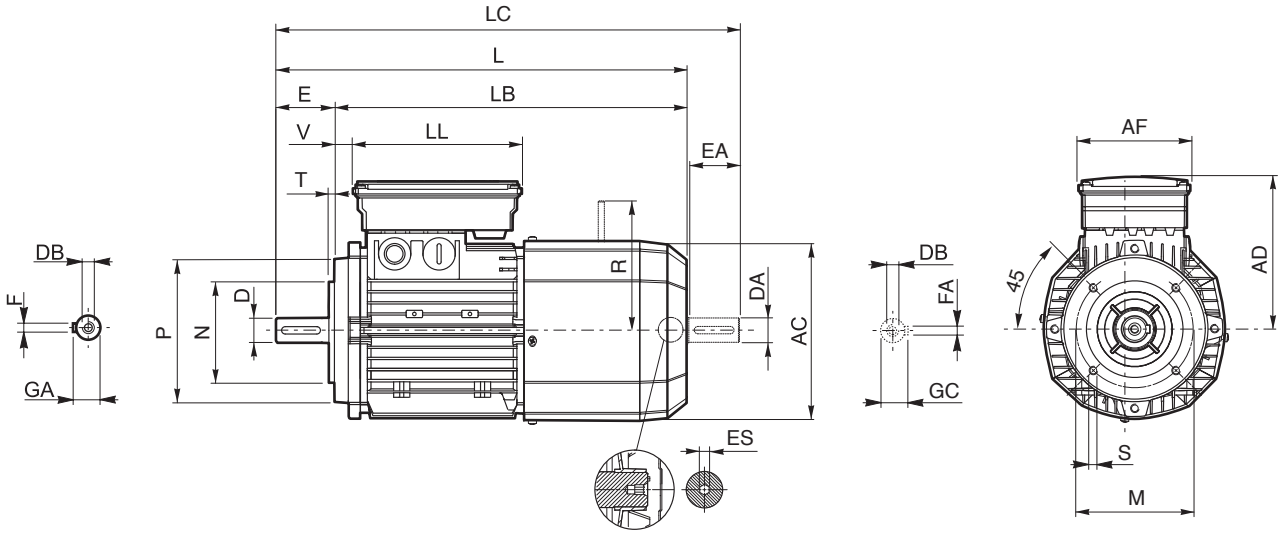

	Shaft					Housing					Motor										
	D DA	E EA	DB	GA GC	F FA	M	N	P	S	T	AC	L	LB	LC	AD	AF	LL	V	R FD	R FA	ES (2)
BX 80 B	19 14(1)	40 30(1)	M6 M5(1)	21.5 16(1)	6 5(1)	100	80	120	M6	3	156	392	352	423	143	98	133	25	129	134	5
BX 90 S	24 19(1)	50 40(1)	M8 M6(1)	27 21.5 (1)	8 6(1)	115	95	140	M8		176	410	360	452	146	110	165	32			6
BX 90 LA																			160	160	
BX 100 LA	28 24(1)	60 50(1)	M10 M8(1)	31 27(1)	8 8(1)	130	110	160		3.5	195	502	442	554	155			37			
BX 100 LB																					
BX 112 M											219	527	467	579	170			39	199	198	
BX 132 SB	38 28(1)	80 60(1)	M12 M10(1)	41 31(1)	10 8(1)	165	130	200	M10	4	258	603	523	667	210	140	188	46	204	200	
BX 132 MA												627	547	690						226	

N.B.:
1) These values refer to the rear shaft end (PS).
2) “ES” hexagon is not present with PS option

I 3

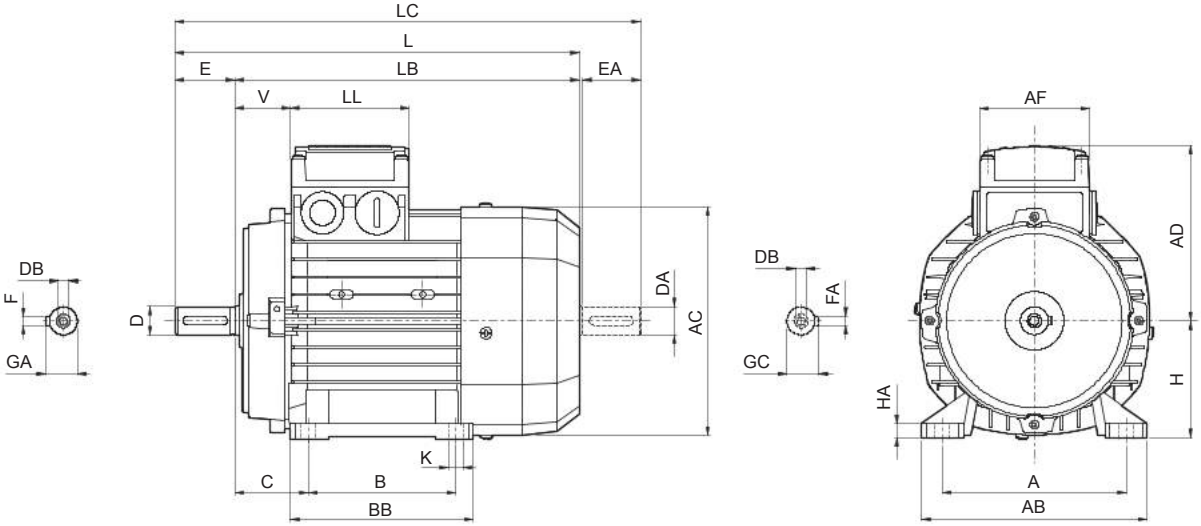

	Shaft					Housing						Motor									
	D DA	**E EA**	**DB**	**GA GC**	**F FA**	**B**	**A**	**HA**	**BB**	**AB**	**K**	**C**	**H**	**AC**	**L**	**LB**	**LC**	**AD**	**AF**	**LL**	**V**
BX 90 SR	19 19(1)	40 40(1)	M6 M6(1)	21.5 21.5(1)	6 6(1)	100	140	8	155	174	10	56	90	176	316	276	358	133	98	98	44
BX 90 S	24 19(1)	50 40(1)	M8 M6(1)	27 21.5 (1)	8 6(1)										326		368				
BX 90 LA						125											378				
BX 100 LA	28 24(1)	60 50(1)	M10 M8(1)	31 27(1)	8 8(1)	140	160	10	175	192	12	63	100	195	410	350	462	142			50
BX 100 LB																					
BX 112 M							190			224		70	112	219	430	370	482	157			52
BX 132 SB	38 28(1)	80 60(1)	M12 M10(1)	41 31(1)	10 8(1)		216	12	218	254	12	89	132	258	552	472	615	193	118	118	58
BX 132 MA						178															
BX 160 MA	42 38(1)	110 80(1)	M16 M12(1)	45 41(1)	12 10(1)	210	254	25	264	319	14.5	108	160	310	596	486	680	245	187	187	51
BX 160 MB						254			304						640	530	724				
BX 160 L																					
BX 180 M	48 42(1)	110 110(1)	M16 M16(1)	51.5 45(1)	14 12(1)	241	279	26	291	359	14	121	180	348	708	598	823	261			52
BX 180 L						279			329												

N.B.:
1) These values refer to the rear shaft end (PS).

I

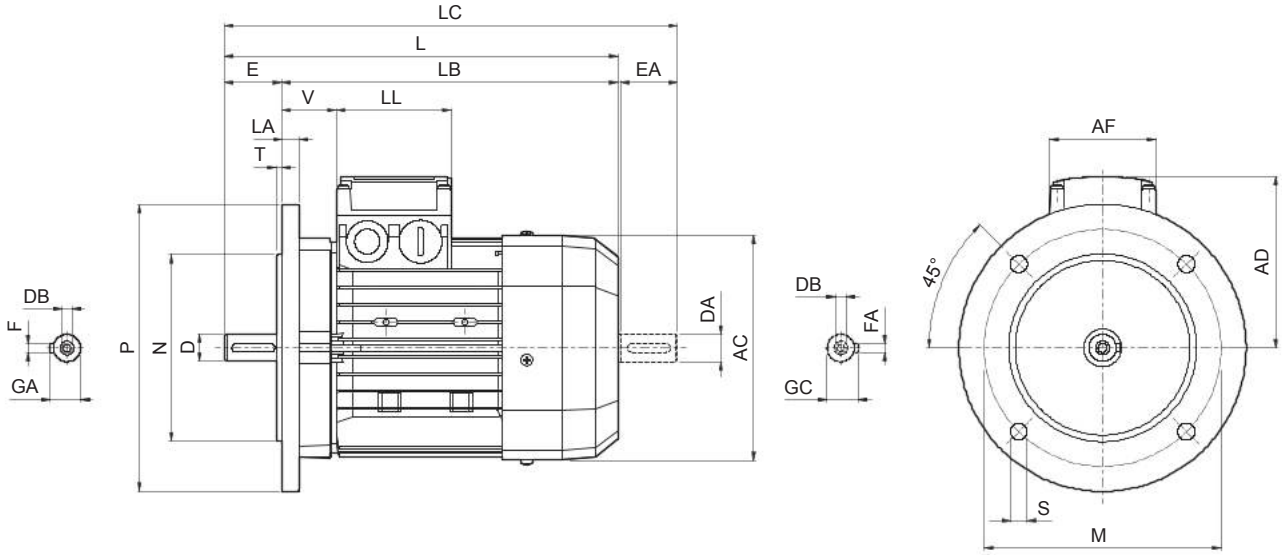

	Shaft					Housing						Motor							
	D DA	**E EA**	**DB**	**GA GC**	**F FA**	**M**	**N**	**P**	**S**	**T**	**LA**	**AC**	**L**	**LB**	**LC**	**AD**	**AF**	**LL**	**V**
BX 90 SR	19 19(1)	40 40(1)	M6 M6(1)	21.5 21.5(1)	6 6(1)	165	130	200	11.5	3.5	11.5	176	316	276	358	133	98	98	44
BX 90 S	24 19(1)	50 40(1)	M8 M6(1)	27 21.5 (1)	8 6(1)								326		368				
BX 90 LA																			
BX 100 LA	28 24(1)	60 50(1)	M10 M8(1)	31 27(1)	8 8(1)	215	180	250	14	4	14	195	410	350	462	142			50
BX 100 LB																			
BX 112 M											15	219	430	370	482	157			52
BX 132 SB	38 28(1)	80 60(1)	M12 M10(1)	41 31(1)	10 8(1)	265	230	300			20	258	552	472	615	193	118	118	58
BX 132 MA																			
BX 160 MA	42 38(1)	110 80(1)	M16 M12(1)	45 41(1)	12 10(1)	300	250	350	18.5	5	15	310	596	486	680	245	187	187	51
BX 160 MB													640	530	724				
BX 160 L																			
BX 180 M	48 42(1)	110 110(1)	M16 M16(1)	51.5 45(1)	14 12(1)						18	348	708	598	823	261			52
BX 180 L																			

N.B.:
1) These values refer to the rear shaft end (PS).

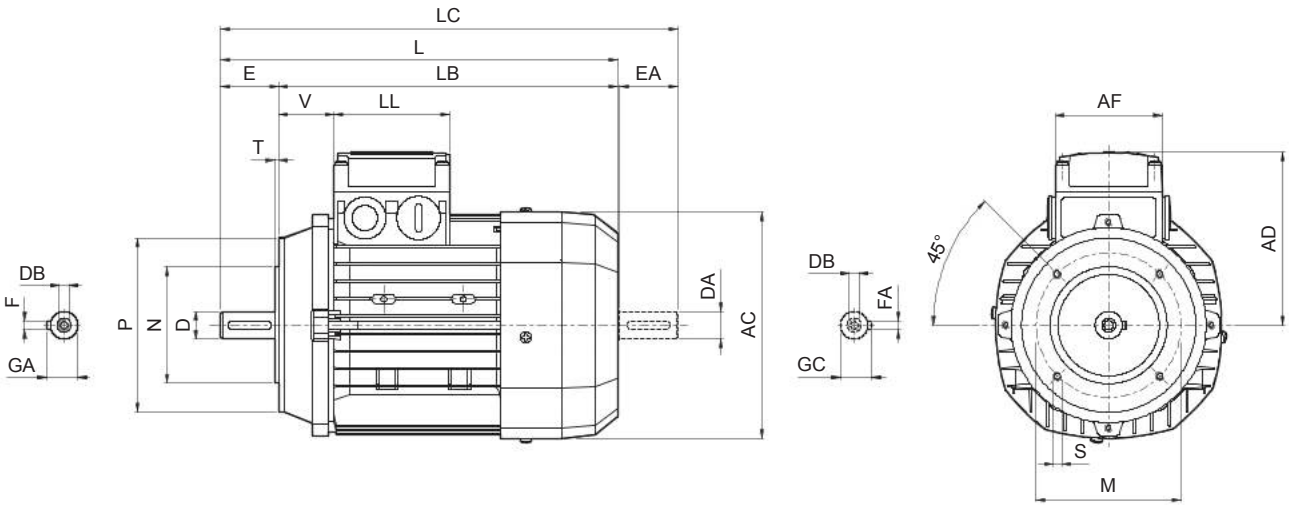

	Shaft					Housing					Motor							
	D DA	**E EA**	**DB**	**GA GC**	**F FA**	**M**	**N**	**P**	**S**	**T**	**AC**	**L**	**LB**	**LC**	**AD**	**AF**	**LL**	**V**
BX 90 SR	19 19(1)	40 40(1)	M6 M6(1)	21.5 21.5(1)	6 6(1)	100	80	120	M6	3	176	316	276	358	133	98	98	44
BX 90 S	24 19(1)	50 40(1)	M8 M6(1)	27 21.5 (1)	8 6(1)	115	95	140	M8			326		368				
BX 90 LA																		
BX 100 LA	28 24(1)	60 50(1)	M10 M8(1)	31 27(1)	8 8(1)	130	110	160		3.5	195	410	350	462	142			50
BX 100 LB																		
BX 112 M											219	430	370	482	157			52
BX 132 SB	38 28(1)	80 60(1)	M12 M10(1)	41 31(1)	10 8(1)	165	130	200	M10	4	258	552	472	615	193	118	118	58
BX 132 MA																		

N.B.:
1) These values refer to the rear shaft end (PS).

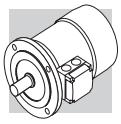

I 3

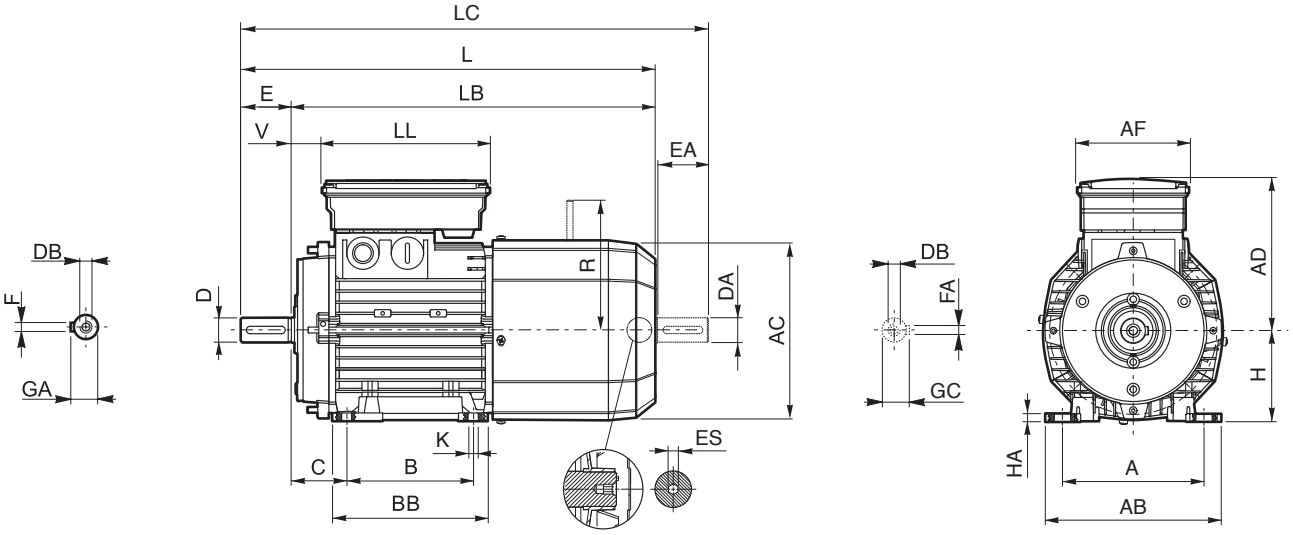

	Shaft					Housing						Motor												
	D DA	E EA	DB	GA GC	F FA	B	A	HA	BB	AB	K	C	H	AC	L	LB	LC	AD	AF	LL	V	R FD	R FA	ES (2)
BX 90 SR	19 19(1)	40 40(1)	M6 M6(1)	21.5 21.5(1)	6 6(1)	100	140	8	155	174	10	56	90	176	400	360	442	146	110	165	32	129	134	6
BX 90 S	24 19(1)	50 40(1)	M8 M6(1)	27 21.5 (1)	8 6(1)										410		452							
BX 90 LA						125																160	160	
BX 100 LA	28 24(1)	60 50(1)	M10 M8(1)	31 27(1)	8 8(1)	140	160	10	175	192	12	63	100	195	502	442	554	155			37			
BX 100 LB																								
BX 112 M							190			224		70	112	219	527	467	579	170			39	199	198	
BX 132 SB	38 28(1)	80 60(1)	M12 M10(1)	41 31(1)	10 8(1)	140	216	12	218	254	12	89	132	258	661	581	724	210	140	188	46	204	200	
BX 132 MA						178																	226	
BX 160 MA	42 38(1)	110 80(1)	M16 M12(1)	45 41(1)	12 10(1)	210	254	25	264	319	14.5	108	160	310	596	486	680	245	187	187	51	266	247	—
BX 160 MB						254			304						640	530	724							
BX 160 L																								
BX 180 M	48 42(1)	110 110(1)	M16 M16(1)	51.5 45(1)	14 12(1)	241	279	26	291	359	14	121	180	348	866	598	823	261			52	305	—	
BX 180 L						279			329															

N.B.:
1) These values refer to the rear shaft end (PS).
2) “ES” hexagon is not present with PS option

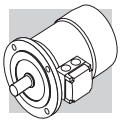

I

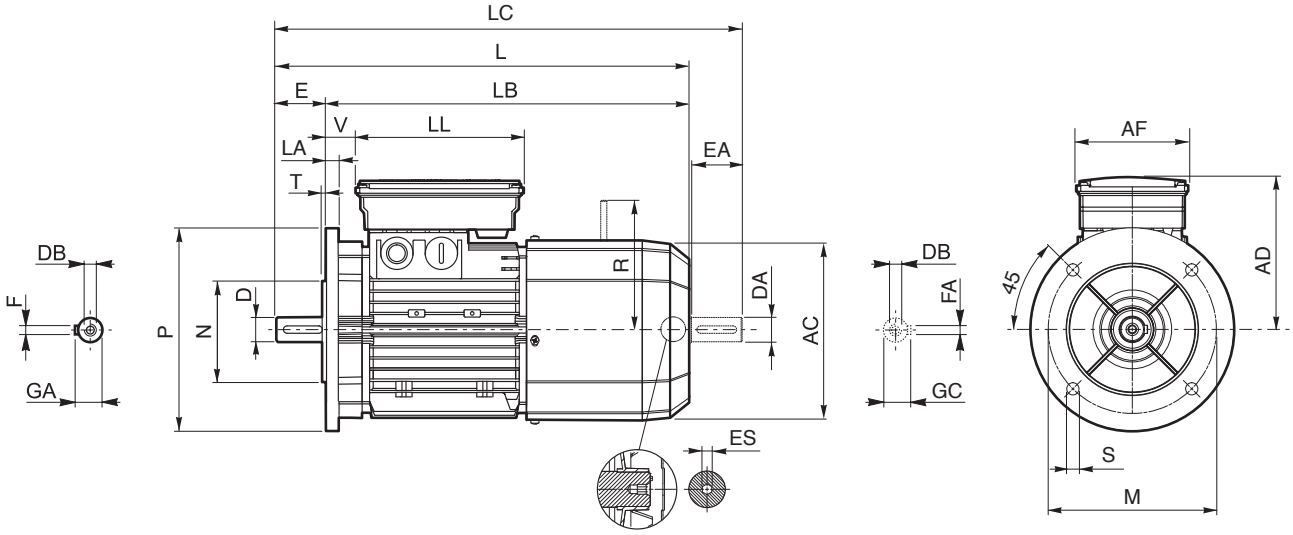

	Shaft					Housing						Motor										
	D DA	E EA	DB	GA GC	F FA	M	N	P	S	T	LA	AC	L	LB	LC	AD	AF	LL	V	R FD	R FA	ES (2)
BX 90 SR	19 19(1)	40 40(1)	M6 M6(1)	21.5 21.5(1)	6 6(1)	165	130	200	11.5	3.5	11.5	176	400	360	442	146	110	165	32	129	134	6
BX 90 S	24 19(1)	50 40(1)	M8 M6(1)	27 21.5 (1)	8 6(1)								410		452							
BX 90 LA																				160	160	
BX 100 LA	28 24(1)	60 50(1)	M10 M8(1)	31 27(1)	8 8(1)	215	180	250	14	4	14	195	502	442	554	155			37			
BX 100 LB																						
BX 112 M											15	219	527	467	579	170			39	199	198	
BX 132 SB	38 28(1)	80 60(1)	M12 M10(1)	41 31(1)	10 8(1)	265	230	300			16	258	661	581	724	210	140	188	46	204	200	
BX 132 MA																					226	
BX 160 MA	42 38(1)	110 80(1)	M16 M12(1)	45 41(1)	12 10(1)	300	250	350	18.5	5	15	310	736	626	820	245	187	187	51	266	247	—
BX 160 MB													780	670	864							
BX 160 L																						
BX 180 M	48 42(1)	110 110(1)	M16 M16(1)	51.5 45(1)	14 12(1)						18	348	866	756	981	261			52	305	—	
BX 180 L																						

N.B.:
1) These values refer to the rear shaft end (PS).
2) “ES” hexagon is not present with PS option

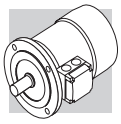

I 1

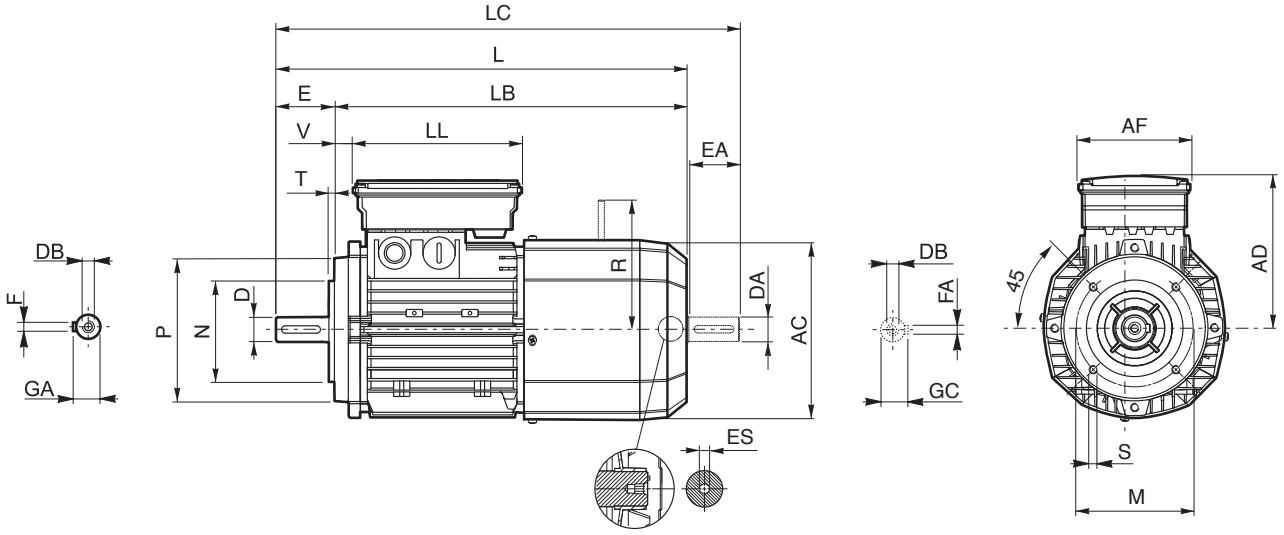

	Shaft					Housing					Motor										
	D DA	E EA	DB	GA GC	F FA	M	N	P	S	T	AC	L	LB	LC	AD	AF	LL	V	R FD	R FA	ES (2)
BX 90 SR	19 19(1)	40 40(1)	M6 M6(1)	21.5 21.5(1)	6 6(1)	100	80	120	M6	3	176	400	360	442	146	110	165	32	129	134	6
BX 90 S	24 19(1)	50 40(1)	M8 M6(1)	27 21.5 (1)	8 6(1)	115	95	140	M8			410		452					160	160	
BX 90 LA																					
BX 100 LA	28 24(1)	60 50(1)	M10 M8(1)	31 27(1)	8 8(1)	130	110	160		3.5	195	502	442	554	155			37			
BX 100 LB																					
BX 112 M											219	527	467	579	170			39	199	198	
BX 132 SB	38 28(1)	80 60(1)	M12 M10(1)	41 31(1)	10 8(1)	165	130	200	M10	4	258	661	581	724	210	140	188	46	204	200	
BX 132 MA																				226	

N.B.:
1) These values refer to the rear shaft end (PS).
2) “ES” hexagon is not present with PS option

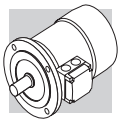

15 MOTOR RATING CHARTS BE

2 P	3000 min^{-1} - S1	50 Hz - IE2

P_n kW			n min^{-1}	M_n Nm	In 400V A	η% 100%	η% 75%	η% 50%	cos φ	I_s/I_n	M_s/M_n	M_a/M_n	J_m x 10^{-4} kgm^2	IM B5 Kg
0.75	**BE 80A**	**2**	2860	2.5	1.65	80.0	79.6	76.4	0.83	6.8	3.8	3.5	9.0	9.5
1.1	**BE 80B**	**2**	2845	3.7	2.35	81.5	82.2	79.9	0.83	6.9	3.8	3.1	11.4	11.3
1.5	**BE 90SA**	**2**	2865	5.0	3.2	81.3	80.7	78.1	0.82	6.8	3.6	2.8	12.5	12.3
2.2	**BE 90L**	**2**	2870	7.3	4.7	83.2	83.1	80.8	0.82	6.9	3.1	2.9	16.7	14
3	**BE 100L**	**2**	2880	9.9	6.2	84.6	84.6	83.7	0.83	7.3	3.5	3.1	39	23
4	**BE 112M**	**2**	2920	13.1	8.2	85.8	85.5	84.3	0.82	7.9	3.5	3.1	57	28
5.5	**BE 132SA**	**2**	2925	18.0	10.6	87.0	85.0	81.7	0.86	8.5	3.6	3.3	145	42
7.5	**BE 132SB**	**2**	2935	24	14.3	88.1	87.4	84.7	0.86	8.8	3.9	3.6	178	53
9.2	**BE 132MB**	**2**	2920	30	16.4	88.8	86.5	84.2	0.91	8.4	3.7	3.3	210	65
11	**BE 160MA**	**2**	2940	36	20.0	89.4	89.5	88.0	0.89	8.1	3.0	2.9	340	84
15	**BE 160MB**	**2**	2950	49	27.2	90.5	90.5	89.5	0.88	8.5	3.0	2.8	420	97
18.5	**BE 160L**	**2**	2945	60	32	90.9	90.5	89.8	0.91	7.7	2.9	2.7	490	109

4 P	1500 min^{-1} - S1	50 Hz - IE2

P_n kW			n min^{-1}	M_n Nm	In 400V A	η% 100%	η% 75%	η% 50%	cos φ	I_s/I_n	M_s/M_n	M_a/M_n	J_m x 10^{-4} kgm^2	IM B5 Kg
0.75	**BE 80B**	**4**	1430	5.0	1.65	81.0	80.5	78.0	0.81	6.1	3.2	3.0	28	12.2
1.1	**BE 90S**	**4**	1430	7.4	2.53	82.5	82.0	79.5	0.76	6.3	2.9	2.8	28	13.6
1.5	**BE 90LA**	**4**	1430	10.0	3.5	83.5	83.0	80.0	0.74	5.9	3.1	3.0	34	15.1
2.2	**BE 100LA**	**4**	1430	14.7	4.9	85.4	85.0	84.0	0.76	5.8	3.0	2.8	54	22
3	**BE 100LB**	**4**	1420	20	6.6	85.5	86.0	85.5	0.77	5.9	2.8	2.6	61	24
4	**BE 112M**	**4**	1440	27	8.3	87.0	87.0	86.0	0.80	6.5	2.8	2.8	105	32
5.5	**BE 132S**	**4**	1460	36	11.1	88.5	88.5	87.5	0.81	7.3	2.9	2.9	270	53
7.5	**BE 132MA**	**4**	1460	49	14.8	89.0	89.0	88.5	0.82	6.9	2.9	2.8	319	59
9.2	**BE 132MB**	**4**	1460	60	18.1	89.5	89.5	88.5	0.82	6.9	2.9	3.0	360	70
11	**BE 160M**	**4**	1465	72	21.5	91.0	91.3	90.5	0.81	6.5	2.8	2.6	650	99
15	**BE 160L**	**4**	1465	98	28.7	90.8	91.0	90.5	0.83	6.5	2.6	2.3	790	115
18.5	**BE 180M**	**4**	1465	121	35	91.6	92.0	91.3	0.83	6.5	2.6	2.5	1250	135
22	**BE 180L**	**4**	1465	143	41	91.6	91.8	91.4	0.84	6.8	2.7	2.6	1650	157

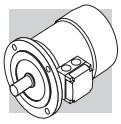

6 P	1000 min^{-1} - S1	50 Hz - IE2

P_n kW		n min^{-1}	M_n Nm	In 400V A	η% 100%	η% 75%	η% 50%	cos φ	I_s/I_n	M_s/M_n	M_a/M_n	J_m x 10^{-4} kgm^2	IM B5 Kg
0.75	**BE 90S 6**	935	7.7	2.06	75.9	75.9	73.0	0.69	5.1	3.1	2.9	33	15
1.1	**BE 100M 6** (*)	945	11.1	2.75	78.1	76.2	73.0	0.74	4.9	2.2	1.9	82	22
1.5	**BE 100LA 6**	945	15.2	3.9	79.8	77.5	74.0	0.72	5.6	2.5	2.3	95	24
2.2	**BE 112M 6**	950	22	5.2	81.8	81.8	79.3	0.74	5.2	2.6	2.3	168	32
3	**BE 132S 6**	955	30	6.6	83.3	83.3	82.4	0.79	6.1	2.1	1.9	295	44
4	**BE 132MA 6**	965	40	8.7	84.6	85.0	83.1	0.79	6.9	2.2	2.0	383	56
5.5	**BE 160MA 6** (*)	965	54	11.6	87.0	87.0	86.4	0.79	6.6	2.5	2.3	740	83
7.5	**BE 160MB 6** (*)	965	74	15.0	88.0	88.0	87.2	0.82	6.6	2.3	2.1	970	103

(*) Power /size relation not standardized

E

16 MOTORS DIMENSIONS BE

E I 3

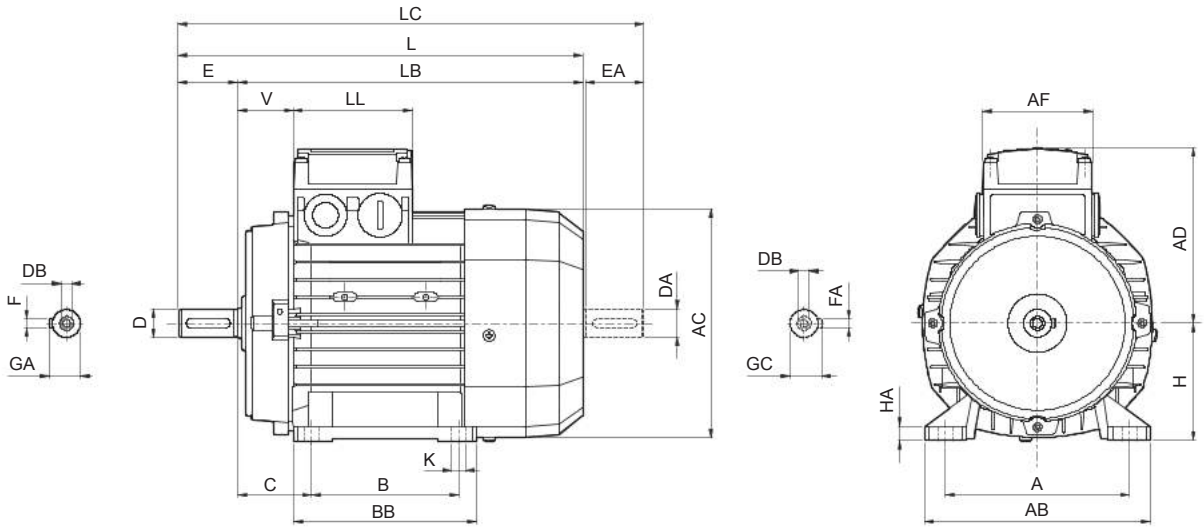

	Shaft					Housing						Motor									
	D DA	E EA	DB	GA GC	F FA	B	A	HA	BB	AB	K	C	H	AC	L	LB	LC	AD	AF	LL	V
BE 80	19	40	M6	21.5	6	100	125	8	124	153	10	50	80	156	274	234	315	119	74	80	38
BE 90 S	24	50	M8	27	8		140	8	155	174		56	90	176	326	276	378	133	98	98	44
BE 90 L						125															
BE 100	28	60	M10	31		140	160	10	175	192	12	63	100	195	367	307	429	142			50
BE 112							190			224		70	112	219	385	325	448	157			52
BE 132 S	38	80	M12	41	10		216	12	218	254		89	132	258	493	413	576	193	118	118	58
BE 132 MA						178															
BE 132 MB															528	448	611				
BE 160 M	42 38(1)	110 80(1)	M16 M12(1)	45 41(1)	12 10(1)	210	254	25	264	319	14.5	108	160	310	596	486	680	245	187	187	51
BE 160 L						254			304						640	530	724				
BE 180 M	48 42(1)	110 110(1)	M16 M16(1)	51.5 45(1)	14 12(1)	241	279	26	291	359	14	121	180	348	708	598	823	261			52
BE 180 L						279			329												

N.B.:
1) These values refer to the rear shaft end.

E I

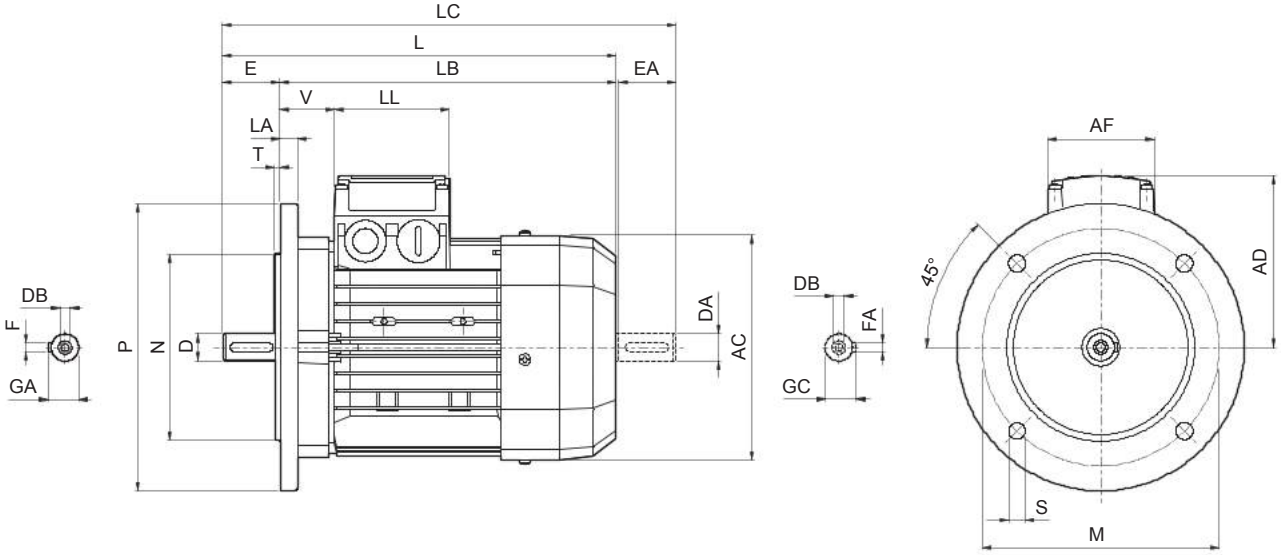

	Shaft					Flange						Motor							
	D DA	**E EA**	**DB**	**GA GC**	**F FA**	**M**	**N**	**P**	**S**	**T**	**LA**	**AC**	**L**	**LB**	**LC**	**AD**	**AF**	**LL**	**V**
BE 80	19	40	M6	21.5	6	165	130	200	11.5	3.5	11.5	156	274	234	315	119	74	80	38
BE 90 S	24	50	M8	27	8							176	326	276	378	133	98	98	44
BE 90 L																			
BE 100	28	60	M10	31		215	180	250	14	4	14	195	367	307	429	142			50
BE 112											15	219	385	325	448	157			52
BE 132 S	38	80	M12	41	10	265	230	300			20	258	493	413	576	193	118	118	58
BE 132 MA																			
BE 132 MB													528	448	611				
BE 160 M	42 38(1)	110 80(1)	M16 M12(1)	45 41(1)	12 10(1)	300	250	350	18.5	5	15	310	596	486	680	245	187	187	51
BE 160 L													640	530	724				
BE 180 M	48 42(1)	110 110(1)	M16 M16(1)	51.5 45(1)	14 12(1)						18	348	708	598	823	261			52
BE 180 L																			

N.B.:
1) These values refer to the rear shaft end.

E I 1

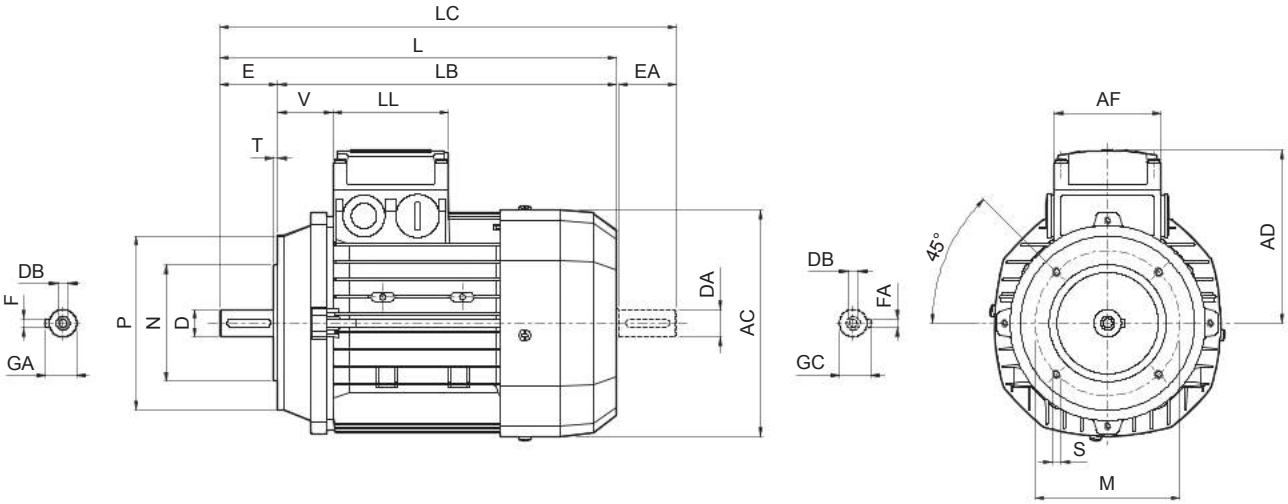

	Shaft					Flange					Motor							
	D DA	**E EA**	**DB**	**GA GC**	**F FA**	**M**	**N**	**P**	**S**	**T**	**AC**	**L**	**LB**	**LC**	**AD**	**AF**	**LL**	**V**
BE 80	19	40	M6	21.5	6	100	80	120	M6	3	156	274	234	315	119	74	80	38
BE 90 S	24	50	M8	27	8	115	95	140	M8		176	326	276	378	133	98	98	44
BE 90 L																		
BE 100	28	60	M10	31		130	110	160		3.5	195	367	307	429	142			50
BE 112											219	385	325	448	157			52
BE 132 S	38	80	M12	41	10	165	130	200	M10	4	258	493	413	576	193	118	118	58
BE 132 MA																		
BE 132 MB												528	448	611				

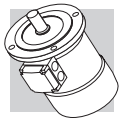

2P — 3000 min-1 - S1 — 50 Hz

P_n kW			n min-1	M_n Nm	IE1	η (100%) %	η (75%) %	η (50%) %	cosφ	In 400V A	Is/In	Ms/Mn	Ma/Mn	J_m x 10^{-4} kgm²	IM B5 Kg	d.c. brake FD Mod	Mb Nm	Z_o 1/h NB	Z_o 1/h SB	J_m x 10^{-4} kgm²	IM B5 Kg	a.c. brake FA Mod	Mb Nm	Z_o 1/h	J_m x 10^{-4} kgm²	IM B5 Kg
0.18	**BN 63A**	**2**	2730	0.63	○	59.9	56.9	51.9	0.77	0.56	3.0	2.1	2.0	2.0	3.5	**FD 02**	1.75	3900	4800	2.6	5.2	**FA 02**	1.75	4800	2.6	5.0
0.25	**BN 63B**	**2**	2740	0.87	○	66.0	64.8	64.8	0.76	0.72	3.3	2.3	2.3	2.3	3.9	**FD 02**	1.75	3900	4800	3.0	5.6	**FA 02**	1.75	4800	3.0	5.4
0.37	**BN 63C**	**2**	2800	1.26	○	69.1	66.8	66.8	0.78	0.99	3.9	2.6	2.6	3.3	5.1	**FD 02**	3.5	3600	4500	3.9	6.8	**FA 02**	3.5	4500	3.9	6.6
0.37	**BN 71A**	**2**	2820	1.25	○	73.8	73.0	70.6	0.76	0.95	4.8	2.8	2.6	3.5	5.4	**FD 03**	3.5	3000	4100	4.6	8.1	**FA 03**	3.5	4200	4.6	7.8
0.55	**BN 71B**	**2**	2820	1.86	○	76.0	75.8	74.8	0.76	1.37	5.0	2.9	2.8	4.1	6.2	**FD 03**	5	2900	4200	5.3	8.9	**FA 03**	5	4200	5.3	8.6
0.75	**BN 71C**	**2**	2810	2.6	○	76.6	76.2	76.2	0.76	1.86	5.1	3.1	2.8	5.0	7.3	**FD 03**	5	1900	3300	6.1	10.0	**FA 03**	5	3600	6.1	9.7
0.75	**BN 80A**	**2**	2810	2.6	•	76.2	75.5	68.3	0.81	1.75	4.8	2.6	2.2	7.8	8.6	**FD 04**	5	1700	3200	9.4	12.5	**FA 04**	5	3200	9.4	12.4
1.1	**BN 80B**	**2**	2800	3.8	•	76.4	76.2	75.0	0.81	2.57	4.8	2.8	2.4	9.0	9.5	**FD 04**	10	1500	3000	10.6	13.4	**FA 04**	10	3000	10.6	13.3
1.5	**BN 80C**	**2**	2800	5.1	•	79.1	79.5	77.2	0.81	3.4	4.9	2.7	2.4	11.4	11.3	**FD 04**	15	1300	2600	13.0	15.2	**FA 04**	15	2600	13.0	15.1
1.5	**BN 90SA**	**2**	2870	5.0	•	82.0	81.5	78.1	0.80	3.4	5.9	2.7	2.6	12.5	12.3	**FD 14**	15	900	2200	14.1	16.5	**FA 14**	15	2200	14.1	16.4
1.85	**BN 90SB**	**2**	2880	6.1	•	82.5	82.0	75.4	0.80	4.0	6.2	2.9	2.6	16.7	14	**FD 14**	15	900	2200	18.3	18.2	**FA 14**	15	2200	18.3	18.1
2.2	**BN 90L**	**2**	2880	7.3	•	82.7	82.1	80.8	0.80	4.8	6.3	2.9	2.7	16.7	14	**FD 05**	26	900	2200	21	20	**FA 05**	26	2200	21	20.7
3	**BN 100L**	**2**	2860	10.0	•	81.5	81.3	77.4	0.79	6.7	5.6	2.6	2.2	31	20	**FD 15**	26	700	1600	35	26	**FA 15**	26	1600	35	27
4	**BN 100LB**	**2**	2870	13.3	•	83.1	83.0	77.8	0.80	8.7	5.8	2.7	2.5	39	23	**FD 15**	40	450	900	43	29	**FA 15**	40	1000	43	30
4	**BN 112M**	**2**	2900	13.2	•	85.5	84.5	83.0	0.82	8.2	6.9	3.0	2.9	57	28	**FD 06S**	40	—	950	66	39	**FA 06S**	40	950	66	40
5.5	**BN 132SA**	**2**	2890	18.2	•	84.7	84.5	81.2	0.84	11.2	5.9	2.6	2.2	101	35	**FD 06**	50	—	600	112	48	**FA 06**	50	600	112	49
7.5	**BN 132SB**	**2**	2900	25	•	86.5	86.3	84.4	0.85	14.7	6.4	2.6	2.2	145	42	**FD 06**	50	—	550	154	55	**FA 06**	50	550	154	56
9.2	**BN 132M**	**2**	2930	30	•	87.0	86.5	83.6	0.86	17.7	6.7	2.8	2.3	178	53	**FD 56**	75	—	430	189	66	**FA 06**	75	430	189	67
11	**BN 160MR**	**2**	2920	36	•	87.6	87.0	86.0	0.88	20.6	6.9	2.9	2.5	210	65											
15	**BN 160MB**	**2**	2930	49	•	89.6	89.4	88.0	0.86	28.1	7.1	2.6	2.3	340	84											
18.5	**BN 160L**	**2**	2930	60	•	90.4	90.1	89.0	0.86	34	7.6	2.7	2.3	420	97											
22	**BN 180M**	**2**	2930	72	•	89.9	89.7	89.5	0.88	40	7.8	2.6	2.4	490	109											
30	**BN 200LA**	**2**	2930	98	•	90.7	90.1	87.6	0.89	54	7.8	2.7	2.9	770	140											

○ = n.a. • = IE1

4P — 1500 min-1 - S1 — 50 Hz

P_n kW			n min-1	M_n Nm	IE1	η (100%) %	η (75%) %	η (50%) %	cosφ	In 400V A	Is/In	Ms/Mn	Ma/Mn	J_m x 10^{-4} kgm²	IM B5 Kg	d.c. brake FD Mod	Mb Nm	Z_o 1/h NB	Z_o 1/h SB	J_m x 10^{-4} kgm²	IM B5 Kg	a.c. brake FA Mod	Mb Nm	Z_o 1/h	J_m x 10^{-4} kgm²	IM B5 Kg
0.06	BN 56A	4	1340	0.43	○	46.8	44.2	41.3	0.65	0.28	2.6	2.3	2.0	1.5	3.1											
0.09	BN 56B	4	1350	0.64	○	51.7	47.6	42.9	0.60	0.42	2.6	2.5	2.4	1.5	3.1											
0.12	BN 63A	4	1350	0.85	○	59.8	56.2	47.0	0.62	0.47	2.6	1.9	1.8	2.0	3.5	FD 02	1.75	10000	13000	2.6	5.2	FA 02	1.75	13000	2.6	5.0
0.18	BN 63B	4	1320	1.30	○	54.8	52.9	52.5	0.67	0.71	2.6	2.2	2.0	2.3	3.9	FD 02	3.5	10000	13000	3.0	5.6	FA 02	3.5	13000	3.0	5.4
0.25	BN 63C	4	1340	1.78	○	65.3	65.0	57.9	0.69	0.80	2.7	2.1	1.9	3.3	5.1	FD 02	3.5	7800	10000	3.9	6.8	FA 02	3.5	10000	3.9	6.6
0.25	BN 71A	4	1380	1.73	○	63.7	62.2	59.1	0.73	0.78	3.3	1.9	1.7	5.8	5.1	FD 03	3.5	7700	11000	6.9	7.8	FA 03	3.5	11000	6.9	7.5
0.37	BN 71B	4	1370	2.6	○	66.8	66.7	63.0	0.76	1.05	3.7	2.0	1.9	6.9	5.9	FD 03	5	6000	9400	8.0	8.6	FA 03	5.0	9400	8.0	8.3
0.55	BN 71C	4	1380	3.8	○	69.0	68.9	68.8	0.74	1.55	4.1	2.3	2.3	9.1	7.3	FD 53	7.5	4300	8700	10.2	10.0	FA 03	7.5	8700	10.2	9.7
0.55	BN 80A	4	1390	3.8	○	72.0	71.3	69.7	0.77	1.43	4.1	2.3	2.0	15	8.2	FD 04	10	4100	8000	16.6	12.1	FA 04	10	8000	16.6	12.0
0.75	BN 80B	4	1400	5.1	•	75.0	74.5	69.3	0.78	1.85	4.9	2.7	2.5	20	9.9	FD 04	15	4100	7800	22	13.8	FA 04	15	7800	22	13.7
1.1	BN 80C	4	1400	7.5	•	75.5	76.2	70.4	0.78	2.7	5.1	2.8	2.5	25	11.3	FD 04	15	2600	5300	27	15.2	FA 04	15	5300	27	15.1
1.1	BN 90S	4	1390	7.6	•	76.5	76.2	72.2	0.77	2.70	4.6	2.6	2.2	21	12.2	FD 14	15	4800	8000	23	16.4	FA 14	15	8000	23	16.3
1.5	BN 90LA	4	1410	10.2	•	78.7	78.5	74.9	0.77	3.6	5.3	2.8	2.4	28	13.6	FD 05	26	3400	6000	32	19.6	FA 05	26	6000	32	20.3
1.85	BN 90LB	4	1390	12.7	•	78.6	78.9	77.2	0.79	4.3	5.1	2.8	2.6	30	15.1	FD 05	26	3200	5900	34	21.1	FA 05	26	5900	34	21.8
2.2	BN 100LA	4	1410	14.9	•	81.1	81.4	79.9	0.75	5.2	4.5	2.2	2.0	40	18	FD 15	40	2600	4700	44	25	FA 15	40	4700	44	25
3	BN 100LB	4	1410	20	•	82.6	83.8	83.7	0.77	6.8	5.0	2.3	2.2	54	22	FD 15	40	2400	4400	58	28	FA 15	40	4400	58	29
4	BN 112M	4	1430	27	•	84.4	84.2	81.6	0.81	8.4	5.6	2.7	2.5	98	30	FD 06S	60	—	1400	107	40	FA 06S	60	2100	107	42
5.5	BN 132S	4	1440	36	•	84.7	84.8	82.5	0.81	11.6	5.5	2.3	2.2	213	44	FD 56	75	—	1050	223	57	FA 06	75	1200	223	58
7.5	BN 132MA	4	1440	50	•	86.0	86.3	85.3	0.81	15.5	5.7	2.5	2.4	270	53	FD 06	100	—	950	280	66	FA 07	100	1000	280	71
9.2	BN 132MB	4	1440	61	•	88.4	88.6	87.5	0.81	18.8	5.9	2.7	2.5	319	59	FD 07	150	—	900	342	75	FA 07	150	900	342	77
11	BN 160MR	4	1440	73	•	87.6	87.8	86.0	0.81	22.4	6.0	2.7	2.5	360	70	FD 07	150	—	850	382	86	FA 07	150	850	382	88
15	BN 160L	4	1460	98	•	88.7	88.5	88.4	0.81	30	6.0	2.3	2.1	650	99	FD 08	200	—	750	725	129	FA 08	200	750	710	128
18.5	BN 180M	4	1460	121	•	89.3	89.5	89.2	0.81	37	6.2	2.6	2.5	790	115	FD 08	250	—	700	865	145	FA 08	250	700	850	144
22	BN 180L	4	1460	144	•	89.9	90.0	90.0	0.80	44	6.4	2.5	2.5	1250	135	FD 09	300	—	400	1450	175					
30	BN 200L	4	1460	196	•	91.4	91.7	91.0	0.80	59	7.1	2.7	2.8	1650	157	FD 09	400	—	300	1850	197					

○ = n.a. • = IE1

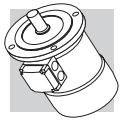

6P — 1000 min^{-1} - S1 — 50 Hz

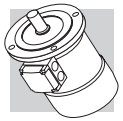

															d.c. brake						a.c. brake				
															FD						FA				
P_n kW		n min^{-1}	M_n Nm	IE1	η (100%) %	η (75%) %	η (50%) %	cosφ	In 400V A	Is/In	Ms/Mn	Ma/Mn	J_m x 10^{-4} kgm^2	IM B5 Kg	Mod	Mb Nm	Z_o 1/h NB	Z_o 1/h SB	J_m x 10^{-4} kgm^2	IM B5 Kg	Mod	Mb Nm	Z_o 1/h	J_m x 10^{-4} kgm^2	IM B5 Kg
0.09	**BN 63A**	**6**	880	0.98	○	41.0	41.0	32.9	0.53	0.60	2.1	2.1	1.8	3.4	4.6	**FD 02**	3.5	9000	14000	4.0	6.3	**FA 02**	3.5	14000	4.0	6.1
0.12	**BN 63B**	**6**	870	1.32	○	45.0	44.0	41.8	0.60	0.64	2.1	1.9	1.7	3.7	4.9	**FD 02**	3.5	9000	14000	4.3	6.6	**FA 02**	3.5	14000	4.3	6.4
0.18	**BN 71A**	**6**	900	1.91	○	55.0	55.5	51.0	0.69	0.68	2.6	1.9	1.7	8.4	5.5	**FD 03**	5	8100	13500	9.5	8.2	**FA 03**	5.0	13500	9.5	7.9
0.25	**BN 71B**	**6**	900	2.70	○	62.0	58.5	51.4	0.71	0.82	2.6	1.9	1.7	10.9	6.7	**FD 03**	5	7800	13000	12	9.4	**FA 03**	5.0	13000	12	9.1
0.37	**BN 71C**	**6**	910	3.9	○	66.0	60.0	53.3	0.69	1.17	3.0	2.4	2.0	12.9	7.7	**FD 53**	7.5	5100	9500	14	10.4	**FA 03**	7.5	9500	14	10.1
0.37	**BN 80A**	**6**	910	3.9	○	68.0	67.4	63.3	0.68	1.15	3.2	2.2	2.0	21	9.9	**FD 04**	10	5200	8500	23	13.8	**FA 04**	10	8500	23	13.7
0.55	**BN 80B**	**6**	920	5.7	○	70.0	69.8	64.3	0.68	1.67	3.9	2.6	2.2	25	11.3	**FD 04**	15	4800	7200	27	15.2	**FA 04**	15	7200	27	15.1
0.75	**BN 80C**	**6**	920	7.8	•	70.0	70.0	64.4	0.65	2.38	3.8	2.5	2.2	28	12.2	**FD 04**	15	3400	6400	30	16.1	**FA 04**	15	6400	30	16.0
0.75	**BN 90S**	**6**	920	7.8	•	70.0	69.0	64.2	0.68	2.27	3.8	2.4	2.2	26	12.6	**FD 14**	15	3400	6500	28	16.8	**FA 14**	15	6500	28	16.7
1.1	**BN 90L**	**6**	920	11.4	•	72.9	72.6	69.1	0.69	3.2	3.9	2.3	2.0	33	15	**FD 05**	26	2700	5000	37	21	**FA 05**	26	5000	37	22
1.5	**BN 100LA**	**6**	940	15.2	•	75.2	74.2	70.3	0.72	4.0	4.1	2.1	2.0	82	22	**FD 15**	40	1900	4100	86	28	**FA 15**	40	4100	86	29
1.85	**BN 100LB**	**6**	930	19.0	•	76.6	72.8	62.6	0.73	4.8	4.6	2.1	2.0	95	24	**FD 15**	40	1700	3600	99	30	**FA 15**	40	3600	99	31
2.2	**BN 112M**	**6**	940	22	•	78.5	79.0	76.5	0.73	5.5	4.8	2.2	2.0	168	32	**FD 06S**	60	—	2100	177	42	**FA 06S**	60	2100	177	44
3	**BN 132S**	**6**	940	30	•	79.7	77.0	75.1	0.76	7.1	5.1	1.9	1.8	216	36	**FD 56**	75	—	1400	226	49	**FA 06**	75	1400	226	50
4	**BN 132MA**	**6**	950	40	•	81.4	81.5	79.5	0.77	9.2	5.5	2.0	1.8	295	45	**FD 06**	100	—	1200	305	58	**FA 07**	100	1200	318	63
5.5	**BN 132MB**	**6**	945	56	•	83.1	80.9	79.1	0.78	12.2	6.1	2.1	1.9	383	56	**FD 07**	150	—	1050	406	72	**FA 07**	150	1050	406	74
7.5	**BN 160M**	**6**	955	75	•	85.0	85.0	84.8	0.81	15.7	5.9	2.2	2.0	740	83	**FD 08**	170	—	900	815	112	**FA 08**	170	900	815	113
11	**BN 160L**	**6**	960	109	•	86.4	86.5	85.9	0.81	22.7	6.6	2.5	2.3	970	103	**FD 08**	200	—	800	1045	133	**FA 08**	200	800	1045	133
15	**BN 180L**	**6**	970	148	•	87.7	88.0	87.3	0.82	30	6.2	2.0	2.4	1550	130	**FD 09**	300	—	600	1750	170					
18.5	**BN 200LA**	**6**	960	184	•	88.6	88.0	87.3	0.81	37	5.9	2.0	2.3	1700	145	**FD 09**	400	—	450	1900	185					

○ = n.a. • = IE1

8P — 750 min^{-1} - S1 — 50 Hz

P_n kW			n min^{-1}	M_n Nm	η %	cosφ	In 400V A	Is/In	Ms/Mn	Ma/Mn	J_m x 10^{-4} kgm^2	IM B5 Kg	d.c. brake FD Mod	Mb Nm	Z_o 1/h NB	Z_o 1/h SB	J_m x 10^{-4} kgm^2	IM B5 Kg	a.c. brake FA Mod	Mb Nm	Z_o 1/h	J_m x 10^{-4} kgm^2	IM B5 Kg
0.09	**BN 71A**	**8**	680	1.26	47	0.59	0.47	2.3	2.4	2.3	10.9	6.7	**FD 03**	3.5	9000	16000	12.0	9.4	**FA 03**	3.5	16000	12.0	9.1
0.12	**BN 71B**	**8**	680	1.69	51	0.59	0.58	2.1	2.3	2.2	12.9	7.7	**FD 03**	5.0	9000	16000	14.0	10.4	**FA 03**	5.0	16000	14.0	10.1
0.18	**BN 80A**	**8**	690	2.49	51	0.60	0.85	2.4	2.2	2.2	15	8.2	**FD 04**	5.0	6500	11000	16.6	12.1	**FA 04**	5.0	11000	16.6	12.0
0.25	**BN 80B**	**8**	680	3.51	54	0.63	1.06	2.4	2.0	1.9	20	9.9	**FD 04**	10.0	6000	10000	22	13.8	**FA 04**	10.0	10000	23	13.7
0.37	**BN 90S**	**8**	675	5.2	58	0.60	1.53	2.6	2.3	2.1	26	12.6	**FD 14**	15.0	4800	7500	28	16.8	**FA 14**	15.0	7500	28	16.7
0.55	**BN 90L**	**8**	670	7.8	62	0.60	2.13	2.6	2.2	2.0	33	15	**FD 05**	26	4000	6400	37	21	**FA 05**	26	6400	37	22
0.75	**BN 100LA**	**8**	700	10.2	68	0.63	2.53	3.4	1.9	1.7	82	22	**FD 15**	26	2800	4800	86	28	**FA 15**	26	4800	86	29
1.1	**BN 100LB**	**8**	700	15.0	68	0.64	3.65	3.2	1.7	1.7	95	24	**FD 15**	40	2500	4000	99	30	**FA 15**	40	4000	99	31
1.5	**BN 112M**	**8**	710	20.2	71	0.66	4.6	3.7	1.8	1.9	168	32	**FD 06S**	60	—	3000	177	42	**FA 06S**	60	3000	177	44
2.2	**BN 132S**	**8**	710	29.6	75	0.66	6.4	3.8	1.8	2.0	295	45	**FD 56**	75	—	2300	305	58	**FA 06**	75	2300	305	56
3	**BN 132MA**	**8**	710	40.4	76	0.69	8.3	3.9	1.6	1.8	370	53	**FD 06**	100	—	1900	394	69	**FA 07**	100	1900	406	74

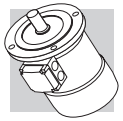

2/4P — 3000/1500 min^{-1} - S1 — 50 Hz

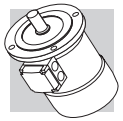

P_n kW			n min^{-1}	M_n Nm	η %	cosφ	In 400V A	Is/In	Ms/Mn	Ma/Mn	J_m x 10^{-4} kgm^2	IM B5 Kg	d.c. brake FD Mod	Mb Nm	Z_o 1/h NB	Z_o 1/h SB	J_m x 10^{-4} kgm^2	IM B5 Kg	a.c. brake FA Mod	Mb Nm	Z_o 1/h	J_m x 10^{-4} kgm^2	IM B5 Kg
0.20	**BN 63B**	**2**	2700	0.71	55	0.82	0.64	3.5	2.1	1.9	2.9	4.4	**FD 02**	3.5	2200	2600	3.5	6.1	**FA 02**	3.5	2600	3.5	5.9
0.15		**4**	1350	1.06	49	0.67	0.66	2.6	1.8	1.7					4000	5100					5100		
0.28	**BN 71A**	**2**	2700	0.99	56	0.82	0.88	2.9	1.9	1.7	4.7	4.4	**FD 03**	3.5	2100	2400	5.8	7.1	**FA 03**	3.5	2400	5.8	6.8
0.20		**4**	1370	1.39	59	0.72	0.68	3.1	1.8	1.7					3800	4800					4800		
0.37	**BN 71B**	**2**	2740	1.29	56	0.82	1.16	3.5	1.8	1.8	5.8	5.1	**FD 03**	5.0	1400	2100	6.9	7.8	**FA 03**	5.0	2100	6.9	7.5
0.25		**4**	1390	1.72	60	0.73	0.82	3.3	2.0	1.9					2900	4200					4200		
0.45	**BN 71C**	**2**	2780	1.55	63	0.85	1.21	3.8	1.8	1.8	6.9	5.9	**FD 03**	5.0	1400	2100	8.0	8.6	**FA 03**	5.0	2100	8.0	8.3
0.30		**4**	1400	2.0	63	0.73	0.94	3.6	2.0	1.9					2900	4200					4200		
0.55	**BN 80A**	**2**	2800	1.9	63	0.85	1.48	3.9	1.7	1.7	15	8.2	**FD 04**	5.0	1600	2300	17	12.1	**FA 04**	5.0	2300	16.6	12.0
0.37		**4**	1400	2.5	67	0.79	1.01	4.1	1.8	1.9					3000	4000					4000		
0.75	**BN 80B**	**2**	2780	2.6	65	0.85	1.96	3.8	1.9	1.8	20	9.9	**FD 04**	10	1400	1600	22	13.8	**FA 04**	10	1600	22	13.7
0.55		**4**	1400	3.8	68	0.81	1.44	3.9	1.7	1.7					2700	3600					3600		
1.1	**BN 90S**	**2**	2790	3.8	71	0.82	2.73	4.7	2.3	2.0	21	12.2	**FD 14**	10	1500	1600	23	16.4	**FA 14**	10	1600	23	16.3
0.75		**4**	1390	5.2	66	0.79	2.08	4.6	2.4	2.2					2300	2800					2800		
1.5	**BN 90L**	**2**	2780	5.2	70	0.85	3.64	4.5	2.4	2.1	28	14.0	**FD 05**	26	1050	1200	32	20	**FA 05**	26	1200	32	21
1.1		**4**	1390	7.6	73	0.81	2.69	4.7	2.5	2.2					1600	2000					2000		
2.2	**BN 100LA**	**2**	2800	7.5	72	0.85	5.2	4.5	2.0	1.9	40	18.3	**FD 15**	26	600	900	44	25	**FA 15**	26	900	44	25
1.5		**4**	1410	10.2	73	0.79	3.8	4.7	2.0	2.0					1300	2300					2300		
3.5	**BN 100LB**	**2**	2850	11.7	80	0.84	7.5	5.4	2.2	2.1	61	25	**FD 15**	40	500	900	65	31	**FA 15**	40	900	65	32
2.5		**4**	1420	16.8	82	0.80	5.5	5.2	2.2	2.2					1000	2100					2100		
4	**BN 112M**	**2**	2880	13.3	79	0.83	8.8	6.1	2.4	2.0	98	30	**FD 06S**	60	—	700	107	40	**FA 06S**	60	700	107	42
3.3		**4**	1420	22.2	80	0.80	7.4	5.1	2.1	2.0					—	1200					1200		
5.5	**BN 132S**	**2**	2890	18.2	80	0.87	11.4	5.9	2.4	2.0	213	44	**FD 56**	75	—	350	223	57	**FA 06**	75	350	223	58
4.4		**4**	1440	29	82	0.84	9.2	5.3	2.2	2.0					—	900					900		
7.5	**BN 132MA**	**2**	2900	25	82	0.87	15.2	6.5	2.4	2.0	270	53	**FD 06**	100	—	350	280	66	**FA 07**	100	350	293	71
6		**4**	1430	40	84	0.85	12.1	5.8	2.3	2.1					—	900					900		
9.2	**BN 132MB**	**2**	2920	30	83	0.86	18.6	6.0	2.6	2.2	319	59	**FD 07**	150	—	300	342	75	**FA 07**	150	300	342	77
7.3		**4**	1440	48	85	0.85	14.6	5.5	2.3	2.1					—	800					800		

2/6P — 3000/1000 min^{-1} - S3 60/40% — 50 Hz

													d.c. brake						a.c. brake				
													FD						FA				
P_n kW			n min^{-1}	M_n Nm	η %	cosφ	In 400V A	Is/In	Ms/Mn	Ma/Mn	J_m x 10^{-4} kgm^2	IM B5 Kg	Mod	Mb Nm	Z_o 1/h NB	Z_o 1/h SB	J_m x 10^{-4} kgm^2	IM B5 Kg	Mod	Mb Nm	Z_o 1/h	J_m x 10^{-4} kgm^2	IM B5 Kg
0.25	**BN 71A**	**2**	2850	0.84	60	0.82	0.73	4.3	1.9	1.8	6.9	5.9	**FD 03**	1.75	1500	1700	8.0	8.6	**FA 03**	2.5	1700	8.0	8.3
0.08		**6**	910	0.84	43	0.70	0.38	2.1	1.4	1.5					10000	13000					13000		
0.37	**BN 71B**	**2**	2880	1.23	62	0.80	1.08	4.4	1.9	1.8	9.1	7.3	**FD 03**	3.5	1000	1300	10.2	10.0	**FA 03**	3.5	1300	10.2	9.7
0.12		**6**	900	1.27	44	0.73	0.54	2.4	1.4	1.5					9000	11000					11000		
0.55	**BN 80A**	**2**	2800	1.88	63	0.86	1.47	4.5	1.9	1.7	20	9.9	**FD 04**	5.0	1500	1800	22	13.8	**FA 04**	5.0	1800	22	13.7
0.18		**6**	930	1.85	52	0.65	0.77	3.3	2.0	1.9					4100	6300					6300		
0.75	**BN 80B**	**2**	2800	2.6	66	0.87	1.89	4.3	1.8	1.6	25	11.3	**FD 04**	5.0	1700	1900	27	15.2	**FA 04**	5.0	1900	27	15.1
0.25		**6**	930	2.6	54	0.67	1.00	3.2	1.7	1.8					3800	6000					6000		
1.10	**BN 90L**	**2**	2860	3.7	67	0.84	2.82	4.7	2.1	1.9	28	14.0	**FD 05**	13	1400	1600	32	20	**FA 05**	13	1600	32	21
0.37		**6**	920	3.8	59	0.71	1.27	3.3	1.6	1.6					3400	5200					5200		
1.5	**BN 100LA**	**2**	2880	5	73	0.84	3.53	5.1	1.9	2.0	40	18.3	**FD 15**	13	1000	1200	44	24	**FA 15**	13	1200	44	25
0.55		**6**	940	5.6	64	0.67	1.85	3.5	1.7	1.8					2900	4000					4000		
2.2	**BN 100LB**	**2**	2900	7.2	77	0.85	4.9	5.9	2.0	2.0	61	25	**FD 15**	26	700	900	65	31	**FA 15**	26	900	65	32
0.75		**6**	950	7.5	67	0.64	2.5	3.3	1.9	1.8					2100	3000					3000		
3	**BN 112M**	**2**	2900	9.9	78	0.87	6.4	6.3	2.0	2.1	98	30	**FD 06S**	40	—	1000	107	40	**FA 06S**	40	1000	107	32
1.1		**6**	950	11.1	72	0.64	3.4	3.9	1.8	1.8					—	2600					2600		
4.5	**BN 132S**	**2**	2910	14.8	78	0.84	9.9	5.8	1.9	1.8	213	44	**FD 56**	37	—	500	223	57	**FA 06**	37	500	223	58
1.5		**6**	960	14.9	74	0.67	4.4	4.2	1.9	2.0					—	2100					2100		
5.5	**BN 132M**	**2**	2920	18.0	78	0.87	11.7	6.2	2.1	1.9	270	53	**FD 56**	50	—	400	280	66	**FA 06**	50	400	280	67
2.2		**6**	960	22	77	0.71	5.8	4.3	2.1	2.0					—	1900					1900		

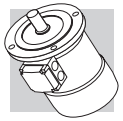

2/8P — 3000/750 min-1 - S3 60/40% — 50 Hz

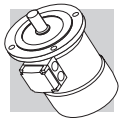

													d.c. brake						a.c. brake				
													FD						FA				
P_n kW			n min-1	M_n Nm	η %	cosφ	In 400V A	Is/In	Ms/Mn	Ma/Mn	J_m x 10^{-4} kgm²	IM B5 Kg	Mod	Mb Nm	Z_o 1/h NB	Z_o 1/h SB	J_m x 10^{-4} kgm²	IM B5 Kg	Mod	Mb Nm	Z_o 1/h	J_m x 10^{-4} kgm²	IM B5 Kg
0.25	**BN 71A**	**2**	2790	0.86	61	0.87	0.68	3.9	1.8	1.9	10.9	6.7	**FD 03**	1.75	1300	1400	12	9.4	**FA 03**	2.5	1400	12	9.1
0.06		**8**	680	0.84	31	0.61	0.46	2.0	1.8	1.9					10000	13000					13000		
0.37	**BN 71B**	**2**	2800	1.26	63	0.86	0.99	3.9	1.8	1.9	12.9	7.7	**FD 03**	3.5	1200	1300	14	10.4	**FA 03**	3.5	1300	14	10.1
0.09		**8**	670	1.28	34	0.75	0.51	1.8	1.4	1.5					9500	13000					13000		
0.55	**BN 80A**	**2**	2830	1.86	66	0.86	1.40	4.4	2.1	2.0	20	9.9	**FD 04**	5.0	1500	1800	22	13.8	**FA 04**	5.0	1800	22	13.7
0.13		**8**	690	1.80	41	0.64	0.72	2.3	1.6	1.7					5600	8000					8000		
0.75	**BN 80B**	**2**	2800	2.6	68	0.88	1.81	4.6	2.1	2.0	25	11.3	**FD 04**	10	1700	1900	27	15.2	**FA 04**	10	1900	27	15.1
0.18		**8**	690	2.5	43	0.66	0.92	2.3	1.6	1.7					4800	7300					7300		
1.10	**BN 90L**	**2**	2830	3.7	63	0.84	3.00	4.5	2.1	1.9	28	14.0	**FD 05**	13	1400	1600	32	20	**FA 05**	13	1600	32	21
0.28		**8**	690	3.9	48	0.63	1.34	2.4	1.8	1.9					3400	5100					5100		
1.5	**BN 100LA**	**2**	2880	5.0	69	0.85	3.69	4.7	1.9	1.8	40	18.3	**FD 15**	13	1000	1200	44	25	**FA 15**	13	1200	44	25
0.37		**8**	690	5.1	46	0.63	1.84	2.1	1.6	1.6					3300	5000					5000		
2.4	**BN 100LB**	**2**	2900	7.9	75	0.82	5.6	5.4	2.1	2.0	61	25	**FD 15**	26	550	700	65	31	**FA 15**	26	700	65	32
0.55		**8**	700	7.5	54	0.58	2.5	2.6	1.8	1.8					2000	3500					3500		
3	**BN 112M**	**2**	2900	9.9	76	0.87	6.5	6.3	2.1	1.9	98	30	**FD 06S**	40	—	900	107	40	**FA 06S**	40	900	107	42
0.75		**8**	690	10.4	60	0.65	2.8	2.5	1.6	1.6					—	2900					2900		
4	**BN 132S**	**2**	2870	13.3	73	0.84	9.4	5.6	2.3	2.4	213	44	**FD 56**	37	—	500	223	57	**FA 06**	37	500	223	58
1		**8**	690	13.8	66	0.62	3.5	2.9	1.9	1.8					—	3500					3500		
5.5	**BN 132M**	**2**	2870	18.3	75	0.84	12.6	6.1	2.4	2.5	270	53	**FD 06**	50	—	400	280	66	**FA 06**	50	400	280	67
1.5		**8**	690	21	68	0.63	5.1	2.9	1.9	1.9					—	2400					2400		

2/12P — 3000/500 min^{-1} - S3 60/40% — 50 Hz

													d.c. brake						a.c. brake				
													FD						FA				
P_n kW			n min^{-1}	M_n Nm	η %	cosφ	In 400V A	Is/In	Ms/Mn	Ma/Mn	J_m x 10^{-4} kgm^2	IM B5 Kg	Mod	Mb Nm	Z_o 1/h NB	Z_o 1/h SB	J_m x 10^{-4} kgm^2	IM B5 Kg	Mod	Mb Nm	Z_o 1/h	J_m x 10^{-4} kgm^2	IM B5 Kg
0.55	**BN 80B**	**2**	2820	1.86	64	0.89	1.39	4.2	1.6	1.7	25	11.3	**FD 04**	5.0	1000	1300	27	15.2	**FA 04**	5.0	1300	27	15.1
0.09		**12**	430	2.0	30	0.63	0.69	1.8	1.9	1.8					8000	12000					12000		
0.75	**BN 90L**	**2**	2790	2.6	56	0.89	2.17	4.2	1.8	1.7	26	12.6	**FD 05**	13	1000	1150	30	18.6	**FA 05**	13	1150	30	19.3
0.12		**12**	430	2.7	26	0.63	1.06	1.7	1.4	1.6					4600	6300					6300		
1.10	**BN 100LA**	**2**	2850	3.7	65	0.85	2.87	4.5	1.6	1.8	40	18.3	**FD 15**	13	700	900	44	25	**FA 15**	13	900	44	25
0.18		**12**	430	4.0	26	0.54	1.85	1.5	1.3	1.5					4000	6000					6000		
1.5	**BN 100LB**	**2**	2900	4.9	67	0.86	3.76	5.6	1.9	1.9	54	22	**FD 15**	13	700	900	58	28	**FA 15**	13	900	58	29
0.25		**12**	440	5.4	36	0.46	2.18	1.8	1.7	1.8					3800	5000					5000		
2	**BN 112M**	**2**	2900	6.6	74	0.88	4.43	6.5	2.1	2.0	98	30	**FD 06S**	20	—	800	107	40	**FA 06S**	20	800	107	42
0.3		**12**	460	6.2	46	0.43	2.19	2.0	2.1	2.0					—	3400					3400		
3	**BN 132S**	**2**	2920	9.8	74	0.87	6.7	6.8	2.3	1.9	213	44	**FD 56**	37	—	450	223	57	**FA 06**	37	450	223	58
0.5		**12**	470	10.2	51	0.43	3.3	2.0	1.7	1.6					—	3000					3000		
4	**BN 132M**	**2**	2920	13.1	75	0.89	8.6	5.9	2.4	2.3	270	53	**FD 56**	37	—	400	280	66	**FA 06**	37	400	280	67
0.7		**12**	460	14.5	53	0.44	4.3	1.9	1.7	1.6					—	2800					2800		

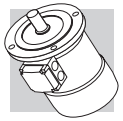

4/6P — 1500/1000 min^{-1} - S1 — 50 Hz

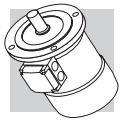

P_n kW			n min^{-1}	M_n Nm	η %	cosφ	In 400V A	Is/In	Ms/Mn	Ma/Mn	J_m x 10^{-4} kgm^2	IM B5 Kg	d.c. brake FD Mod	Mb Nm	Z_o 1/h NB	Z_o 1/h SB	J_m x 10^{-4} kgm^2	IM B5 Kg	a.c. brake FA Mod	Mb Nm	Z_o 1/h	J_m x 10^{-4} kgm^2	IM B5 Kg
0.22	**BN 71B**	**4**	1410	1.5	64	0.74	0.67	3.9	1.8	1.9	9.1	7.3	**FD 03**	3.5	2500	3500	10.2	10.0	**FA 03**	3.5	3500	10.2	9.7
0.13		**6**	920	1.4	43	0.67	0.65	2.3	1.6	1.7					5000	9000					9000		
0.30	**BN 80A**	**4**	1410	2.0	61	0.82	0.87	3.5	1.3	1.5	15	8.2	**FD 04**	5.0	2500	3100	16.6	12.1	**FA 04**	5.0	3100	16.6	12.0
0.20		**6**	930	2.1	54	0.66	0.81	3.2	1.9	2.0					4000	6000					6000		
0.40	**BN 80B**	**4**	1430	2.7	63	0.75	1.22	3.9	1.8	1.8	20	9.9	**FD 04**	10	1800	2300	22	13.8	**FA 04**	10	2300	22	13.7
0.26		**6**	930	2.7	55	0.70	0.97	2.7	1.5	1.6					3600	5500					5500		
0.55	**BN 90S**	**4**	1420	3.7	70	0.78	1.45	4.5	2.0	1.9	21	12.2	**FD 14**	10	1500	2100	23	16.1	**FA 14**	10	2100	23	16.3
0.33		**6**	930	3.4	62	0.70	1.10	3.7	2.3	2.0					2500	4100					4100		
0.75	**BN 90L**	**4**	1420	5.0	74	0.78	1.88	4.3	1.9	1.8	28	14	**FD 05**	13	1400	2000	32	20	**FA 05**	13	2000	32	21
0.45		**6**	920	4.7	66	0.71	1.39	3.3	2.0	1.9					2300	3600					3600		
1.1	**BN 100LA**	**4**	1450	7.2	74	0.79	2.72	5.0	1.7	1.9	82	22	**FD 15**	26	1400	2000	86	28	**FA 15**	26	2000	86	29
0.8		**6**	950	8.0	65	0.69	2.57	4.1	1.9	2.1					2100	3300					3300		
1.5	**BN 100LB**	**4**	1450	9.9	75	0.79	3.65	5.1	1.7	1.9	95	25	**FD 15**	26	1300	1800	99	31	**FA 15**	26	1800	99	32
1.1		**6**	950	11.1	72	0.68	3.24	4.3	2.0	2.1					2000	3000					3000		
2.3	**BN 112M**	**4**	1450	15.2	75	0.78	5.7	5.2	1.8	1.9	168	32	**FD 06S**	40	—	1600	177	42	**FA 06S**	40	1600	177	44
1.5		**6**	960	14.9	73	0.72	4.1	4.9	2.0	2.0					—	2400					2400		
3.1	**BN 132S**	**4**	1460	20	83	0.83	6.5	5.9	2.1	2.0	213	44	**FD 56**	37	—	1200	223	57	**FA 06**	37	1200	223	58
2		**6**	960	20	77	0.75	4.9	4.5	2.1	2.1					—	1900					1900		
4.2	**BN 132MA**	**4**	1460	27	84	0.82	8.8	5.9	2.1	2.2	270	53	**FD 06**	50	—	900	280	66	**FA 06**	50	900	280	67
2.6		**6**	960	26	79	0.72	6.6	4.3	2.0	2.0					—	1500					1500		

4/8P — 1500/750 min^{-1} - S1 — 50 Hz

P_n kW			n min^{-1}	M_n Nm	η %	cosφ	In 400V A	Is/In	Ms/Mn	Ma/Mn	J_m x 10^{-4} kgm^2	IM B5 Kg	d.c. brake FD Mod	Mb Nm	Z_o 1/h NB	Z_o 1/h SB	J_m x 10^{-4} kgm^2	IM B5 Kg	a.c. brake FA Mod	Mb Nm	Z_o 1/h	J_m x 10^{-4} kgm^2	IM B5 Kg
0.37	**BN 80A**	**4**	1400	2.5	63	0.82	1.03	3.3	1.4	1.4	15	8.2	**FD 04**	10	2300	3500	16.6	12.1	**FA 04**	10	3500	16.6	12.0
0.18		**8**	690	2.5	44	0.60	0.98	2.2	1.5	1.6					4500	7000					7000		
0.55	**BN 80B**	**4**	1390	3.8	65	0.86	1.42	3.8	1.7	1.6	20	9.9	**FD 04**	10	2200	2900	22	13.8	**FA 04**	10	2900	22	13.7
0.30		**8**	670	4.3	49	0.65	1.36	2.3	1.7	1.8					4200	6500					6500		
0.65	**BN 90S**	**4**	1390	4.5	73	0.85	1.51	4.0	1.9	1.9	28	13.6	**FD 14**	15	2300	2800	30	17.8	**FA 14**	15	2800	30	17.7
0.35		**8**	690	4.8	49	0.57	1.81	2.5	2.1	2.2					3500	6000					6000		
0.9	**BN 90L**	**4**	1370	6.3	73	0.87	2.05	3.8	1.8	1.8	30	15.1	**FD 05**	26	1700	2100	34	21	**FA 05**	26	2100	34	22
0.5		**8**	670	7.1	57	0.62	2.04	2.4	2.1	2.0					2500	4200					4200		
1.30	**BN 100LA**	**4**	1420	8.7	72	0.83	3.14	4.3	1.7	1.8	82	22	**FD 15**	40	1300	1700	86	28	**FA 15**	40	1700	86	29
0.70		**8**	700	9.6	58	0.64	2.72	2.8	1.8	1.8					2000	3400					3400		
1.8	**BN 100LB**	**4**	1420	12.1	69	0.87	4.3	4.2	1.6	1.7	95	25	**FD 15**	40	1200	1700	99	31	**FA 15**	40	1700	99	32
0.9		**8**	700	12.3	62	0.63	3.3	3.2	1.7	1.8					1600	2600					2600		
2.2	**BN 112M**	**4**	1440	14.6	77	0.85	4.9	5.3	1.8	1.8	168	32	**FD 06S**	60	—	1200	177	42	**FA 06S**	60	1200	177	43
1.2		**8**	710	16.1	70	0.63	3.9	3.3	1.9	1.8					—	2000					2000		
3.6	**BN 132S**	**4**	1440	24	80	0.82	7.9	6.5	2.1	1.9	295	45	**FD 56**	75	—	1000	305	58	**FA 06**	75	1000	305	59
1.8		**8**	720	24	72	0.55	6.6	4.6	1.9	2.0					—	1400					1400		
4.6	**BN 132M**	**4**	1450	30	81	0.83	9.9	6.5	2.2	1.9	383	56	**FD 06**	100	—	1000	393	69	**FA 07**	100	1000	406	74
2.3		**8**	720	31	73	0.54	8.4	4.4	2.3	2.0					—	1300					1300		

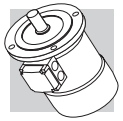

I 3

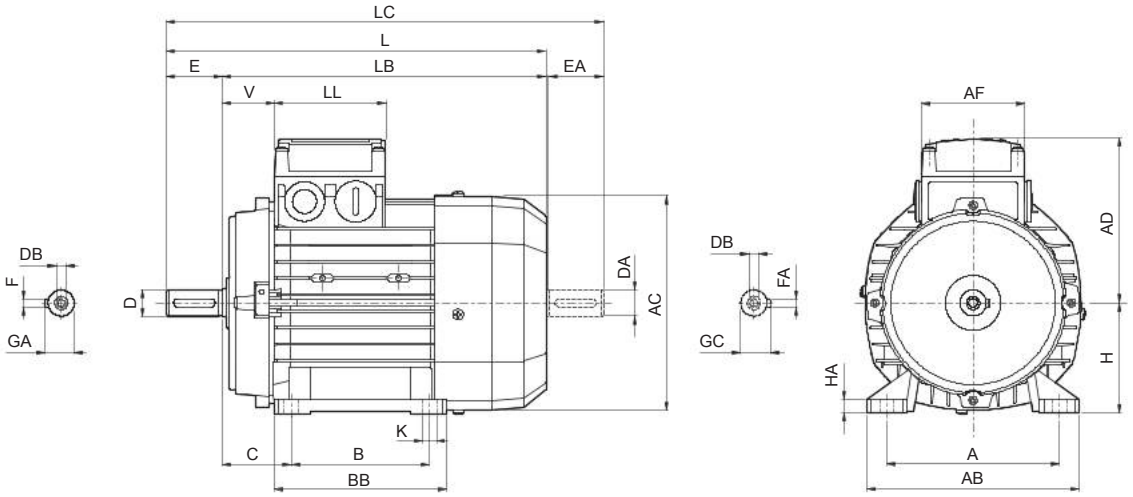

	Shaft					Housing						Motor									
	D DA	E EA	DB	GA GC	F FA	B	A	HA	BB	AB	K	C	H	AC	L	LB	LC	AD	AF	LL	V
BN 63	11	23	M4	12.5	4	80	100	8	96	120	7	40	63	121	207	184	232	95	74	80	30
BN 71	14	30	M5	16	5	90	112	8	112	135		45	71	138	249	219	281	108			37
BN 80	19	40	M6	21.5	6	100	125	8	124	153	10	50	80	156	273	233	315	119			38
BN 90 S	24	50	M8	27	8		140	8	155	174		56	90	176	326	276	378	133	98	98	44
BN 90 L						125															
BN 100	28	60	M10	31	8	140	160	10	175	192	12	63	100	195	366	306	429	142			50
BN 112							190			224		70	112	219	385	325	448	157			52
BN 132 S	38	80	M12	41	10		216	12	218	254		89	132	260	493	413	576	193	118	118	58
BN 132 M						178															
BN 160 M	42 38 (1)	110 80 (1)	M16 M12 (1)	45 41 (1)	12 10 (1)	210	254	25	264	319	14.5	108	160	310	596	486	680	245	187	187	51
BN 160 L						254			304						640	530	724				
BN 180 L	48 42 (1)	110 110 (1)	M16 M16 (1)	51.5 45 (1)	14 12 (1)	279	279	26	329	359	14	121	180	348	708	598	823	261			52
BN 200 L	55 42 (1)		M20 M16 (1)	59 45 (1)	16 12 (1)	305	318		355	398	18	133	200		722	612	837				64

NOTE:
1) These values refer to the rear shaft end.

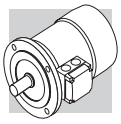

I

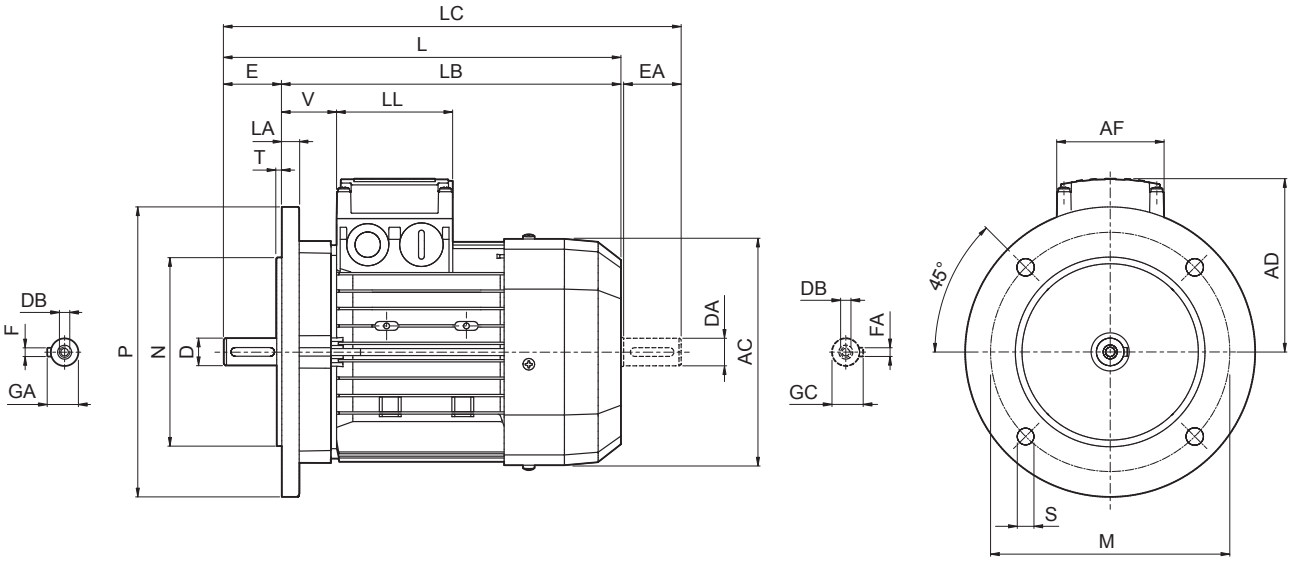

	Shaft					Flange						Motor							
	D DA	**E EA**	**DB**	**GA GC**	**F FA**	**M**	**N**	**P**	**S**	**T**	**LA**	**AC**	**L**	**LB**	**LC**	**AD**	**AF**	**LL**	**V**
BN 56	9	20	M3	10.2	3	100	80	120	7	3	8	110	185	165	207	91	74	80	34
BN 63	11	23	M4	12.5	4	115	95	140	9.5		10	121	207	184	232	95			26
BN 71	14	30	M5	16	5	130	110	160		3.5		138	249	219	281	108			37
BN 80	19	40	M6	21.5	6	165	130	200	11.5		11.5	156	274	234	315	119			38
BN 90	24	50	M8	27	8							176	326	276	378	133	98	98	44
BN 100	28	60	M10	31		215	180	250	14	4	14	195	367	307	429	142			50
BN 112											15	219	385	325	448	157			52
BN 132	38	80	M12	41	10	265	230	300			20	258	493	413	576	193	118	118	58
BN 160 MR	42 38 (1)	110 80 (1)	M16 M12 (1)	45 41 (1)	12 10 (1)	300	250	350	18.5	5	15		562	452	645				218
BN 160 M												310	596	486	680	245	187	187	51
BN 160 L																			
BN 180 M	48 38 (1)	110 110 (1)	M16 M12 (1)	51.5 41 (1)	14 10 (1)							310	640	530	724				
BN 180 L	48 42 (1)		M16 M16 (1)	51.5 45 (1)	14 12 (1)						18	348	708	598	823	261			52
BN 200 L	55 42 (1)		M20 M16 (1)	59 45 (1)	16 12 (1)	350	300	400					722	612	837				66

NOTE:
1) These values refer to the rear shaft end.

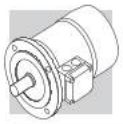

I 1

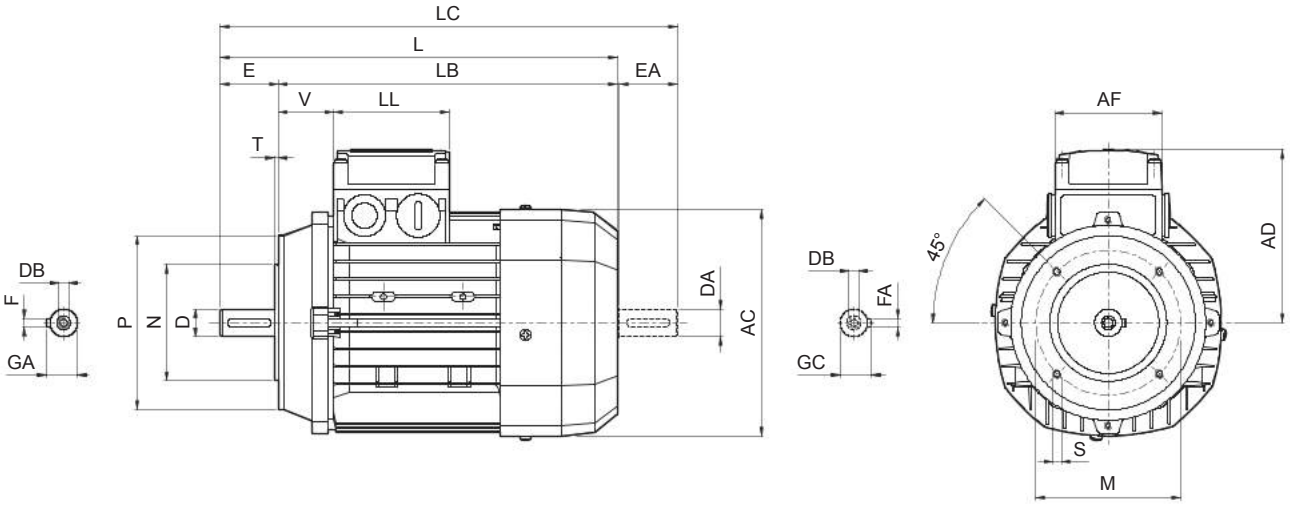

	Shaft					Flange					Motor							
	D DA	**E EA**	**DB**	**GA GC**	**F FA**	**M**	**N**	**P**	**S**	**T**	**AC**	**L**	**LB**	**LC**	**AD**	**AF**	**LL**	**V**
BN 56	9	20	M3	10.2	3	65	50	80	M5	2.5	110	185	165	207	91	74	80	34
BN 63	11	23	M4	12.5	4	75	60	90			121	207	184	232	95			26
BN 71	14	30	M5	16	5	85	70	105	M6		138	249	219	281	108			37
BN 80	19	40	M6	21.5	6	100	80	120		3	156	274	234	315	119			38
BN 90	24	50	M8	27	8	115	95	140	M8		176	326	276	378	133	98	98	44
BN 100	28	60	M10	31		130	110	160		3.5	195	367	307	429	142			50
BN 112											219	385	325	448	157			52
BN 132	38	80	M12	41	10	165	130	200	M10	4	258	493	413	576	193	118	118	58

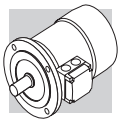

I 3

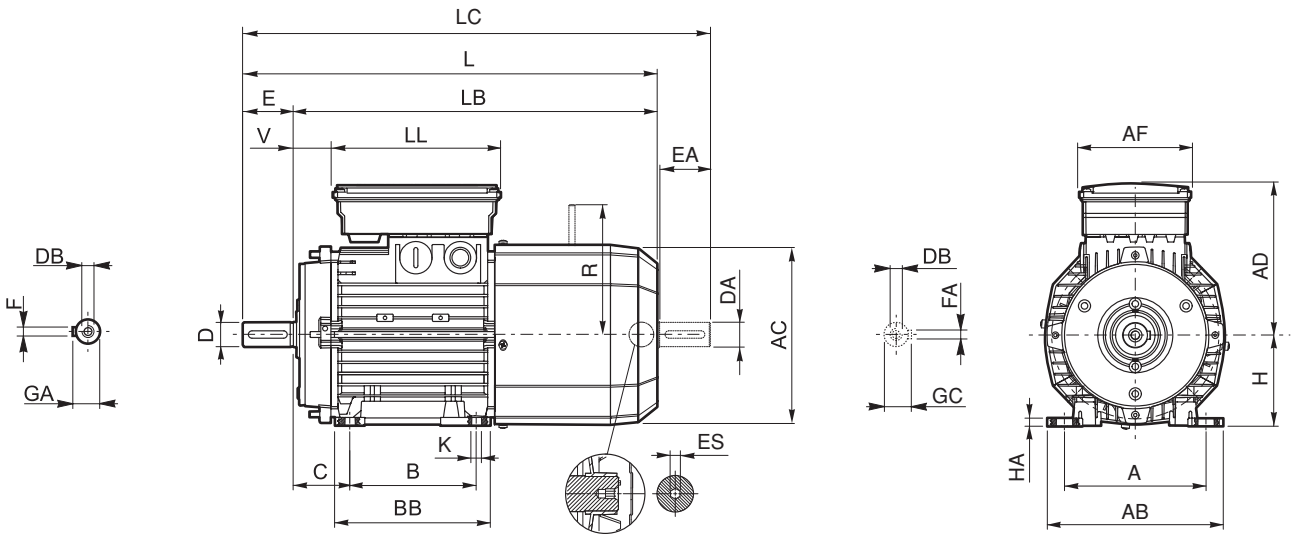

	Shaft					Housing						Motor											
	D DA	E EA	DB	GA GC	F FA	B	A	HA	BB	AB	K	C	H	AC	L	LB	LC	AD	AF	LL	V	R	S
BN 63	11	23	M4	12.5	4	80	100	8	96	120	7	40	63	121	272	249	297	122	98	133	14	96	5
BN 71	14	30	M5	16	5	90	112		112	135		45	71	138	310	280	342	135			25	103	
BN 80	19	40	M6	21.5	6	100	125		124	153	10	50	80	156	346	306	388	146			41	129	
BN 90 S	24	50	M8	27	8		140		155	174		56	90	176	409	359	461	149	110	165	15		6
BN 90 L						125															39	160	
BN 100	28	60	M10	31		140	160	10	175	192	12	63	100	195	458	398	521	158			62		
BN 112							190			224		70	112	219	484	424	547	173			73	199	
BN 132 S	38	80	M12	41	10		216	12	218	254		89	132	260	603	523	686	210	140	188	46	204 (2)	
BN 132 M						178																	
BN 160 M	42 38 (1)	110 80 (1)	M16 M12 (1)	45 41 (1)	12 10 (1)	210	254	25	264	319	14.5	108	160	310	736	626	820	245	187	187	51	266	—
BN 160 L						254			304						780	670	864						
BN 180 L	48 42 (1)	110 110 (1)	M16 M16 (1)	51.5 45 (1)	14 12 (1)	279	279	26	329	359	14	121	180	348	866	756	981	261			52	305	
BN 200 L	55 42 (1)		M20 M16 (1)	59 45 (1)	16 12 (1)	305	318		355	398	18	133	200		878	768	993				64		

NOTE:
1) These values refer to the rear shaft end.
2) For FD07 brake value R=226.

ES hexagon is not supplied with PS option.

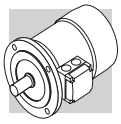

I

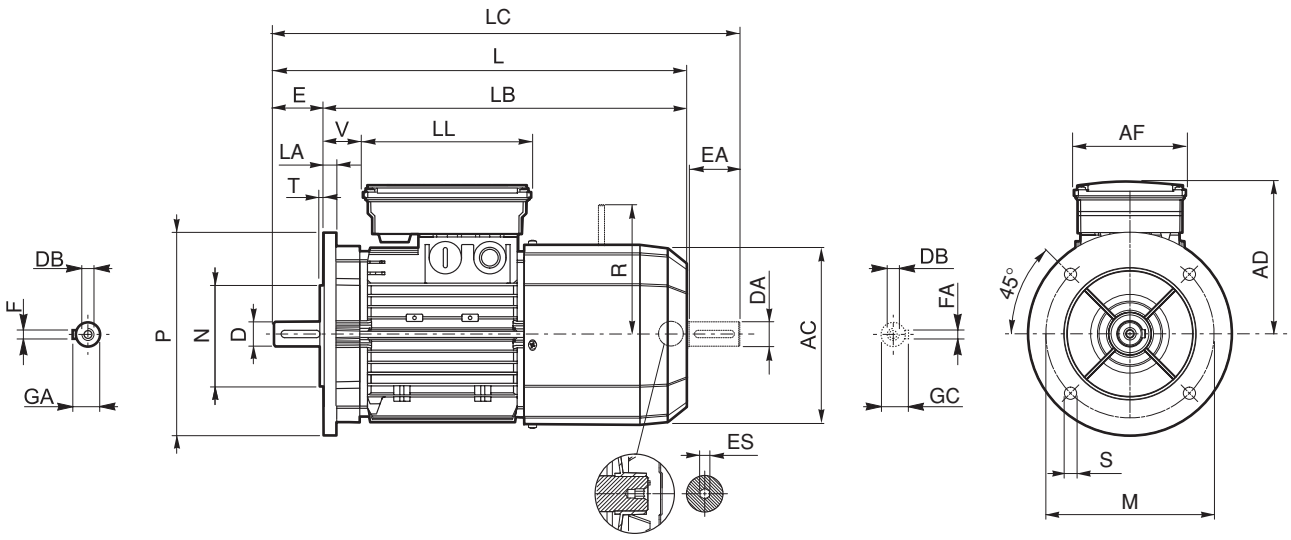

	Shaft					Flange						Motor									
	D DA	E EA	DB	GA GC	F FA	M	N	P	S	T	LA	AC	L	LB	LC	AD	AF	LL	V	R	ES
BN 63	11	23	M4	12.5	4	115	95	140	9.5	3	10	121	272	249	297	122	98	133	14	96	5
BN 71	14	30	M5	16	5	130	110	160	9.5	3.5		138	310	280	342	135			25	103	
BN 80	19	40	M6	21.5	6	165	130	200	11.5		11.5	156	346	306	388	146			41	129	
BN 90 S	24	50	M8	27	8							176	409	359	461	149	110	165	39		6
BN 90 L																146				160	
BN 100	28	60	M10	31		215	180	250	14	4	14	195	458	398	521	158		165	62		
BN 112											15	219	484	424	547	173		165	73	199	
BN 132	38	80	M12	41	10	265	230	300			20	258	603	523	686	210	140	188	46	204 (2)	
BN 160 MR	42 38 (1)	110 80 (1)	M16 M12 (1)	45 41 (1)	12 10 (1)	300	250	350	18.5	5	15		672	562	755				161	226	
BN 160 M												310	736	626	820	245	187	187	51	266	—
BN 160 L	42 38 (1)	110 80 (1)	M16 M12 (1)	45 41 (1)	12 10 (1)																
BN 180 M	48 38 (1)			51.5 41 (1)	14 10 (1)								780	670	864						
BN 180 L	48 42 (1)	110 110 (1)	M16 M16 (1)	51.5 45 (1)	14 12 (1)						18	348	866	756	981	261			52	305	
BN 200 L	55 42 (1)		M20 M16 (1)	59 45 (1)	16 12 (1)	350	300	400	18.5				878	768	993				64		

NOTE:
1) These values refer to the rear shaft end.
2) For FD07 brake value R=226.

ES hexagon is not supplied with PS option.

I 1

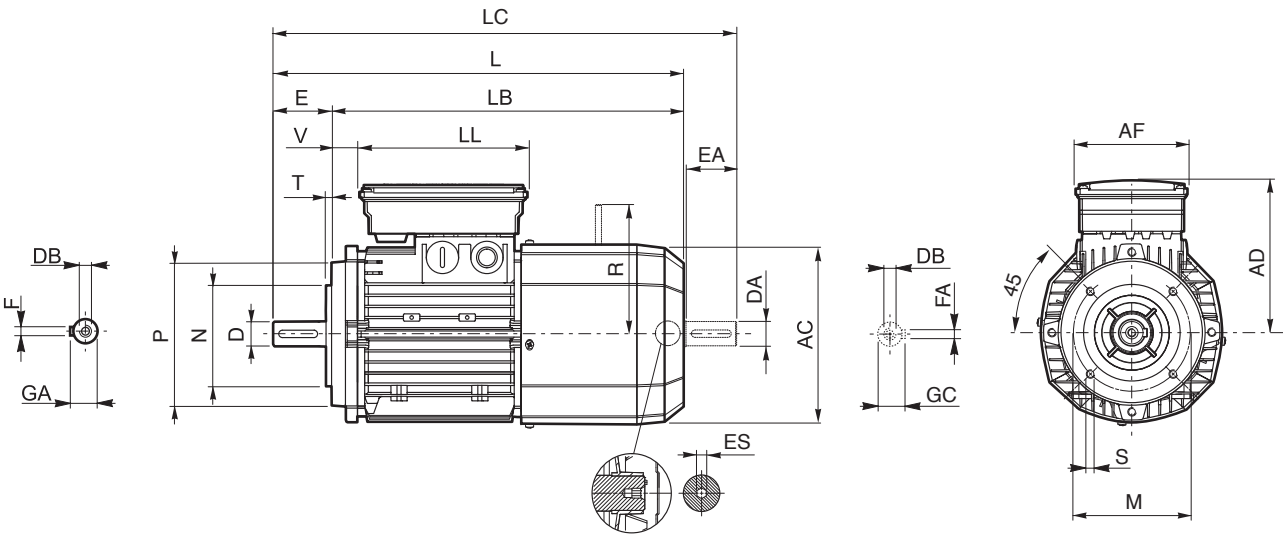

	Shaft					Flange					Motor									
	D DA	**E EA**	**DB**	**GA GC**	**F FA**	**M**	**N**	**P**	**S**	**T**	**AC**	**L**	**LB**	**LC**	**AD**	**AF**	**LL**	**V**	**R**	**ES**
BN 63	11	23	M4	12.5	4	75	60	90	M5	2.5	121	272	249	297	122	98	133	14	96	5
BN 71	14	30	M5	16	5	85	70	105	M6		138	310	280	342	135			25	103	
BN 80	19	40	M6	21.5	6	100	80	120		3	156	346	306	388	146			41	129	
BN 90 S	24	50	M8	27	8	115	95	140	M8		176	409	359	461	149	110	165	39	129	6
BN 90 L															146				160	
BN 100	28	60	M10	31		130	110	160		3.5	195	458	398	521	158			62		
BN 112											219	484	424	547	173			73	199	
BN 132	38	80	M12	41	10	165	130	200	M10	4	258	603	523	686	210	140	188	46	204 (1)	

NOTE:
1) For FD07 brake value R=226.

ES hexagon is not supplied with PS option.

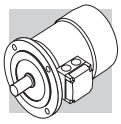

I 3

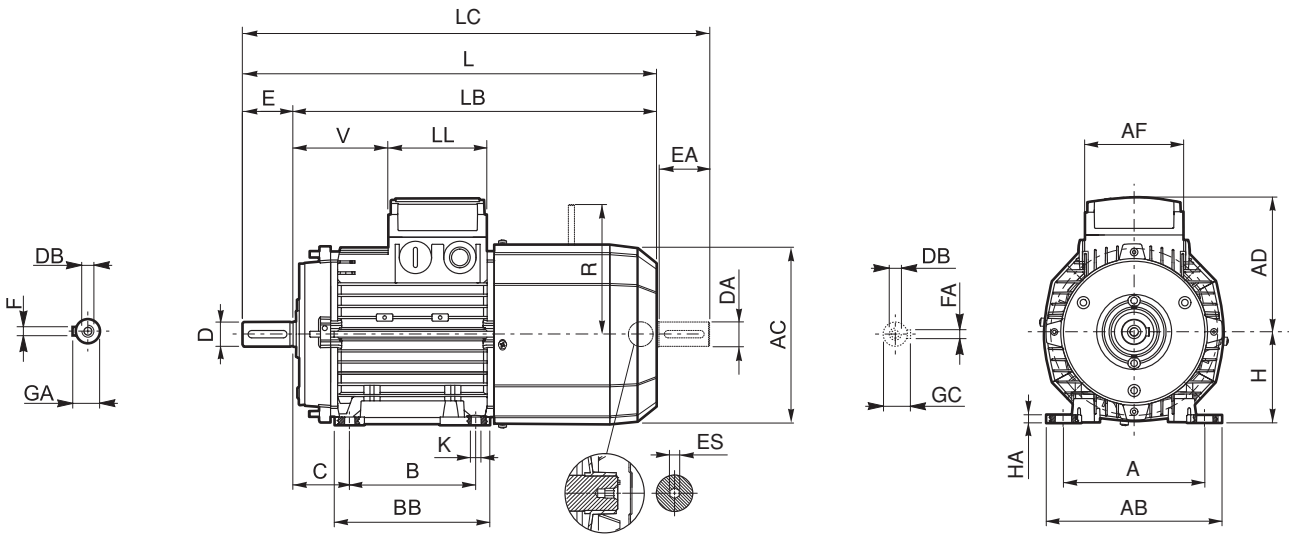

	Shaft					Housing						Motor											
	D DA	**E EA**	**DB**	**GA GC**	**F FA**	**B**	**A**	**HA**	**BB**	**AB**	**K**	**C**	**H**	**AC**	**L**	**LB**	**LC**	**AD**	**AF**	**LL**	**V**	**R**	**S**
BN 63	11	23	M4	12.5	4	80	100	8	96	120	7	40	63	121	272	249	297	95	74	80	51	116	5
BN 71	14	30	M5	16	5	90	112		112	135		45	71	138	310	280	342	108			68	124	
BN 80	19	40	M6	21.5	6	100	125		124	153	10	50	80	156	346	306	388	119			83	134	
BN 90 S	24	50	M8	27	8		140		155	174		56	90	176	409	359	461	133	98	98	71		6
BN 90 L						125															95	160	
BN 100	28	60	M10	31	8	140	160	10	175	192	12	63	100	195	458	398	521	142			119		
BN 112							190			224		70	112	219	484	424	547	157			128	198	
BN 132 S	38	80	M12	41	10		216	12	218	254		89	132	260	603	523	686	210	140	188	46	200 (2)	
BN 132 M						178																	
BN 160 M	42 38 (1)	110 80 (1)	M16 M12 (1)	45 41 (1)	12 10 (1)	210	254	25	264	319	14.5	108	160	310	736	626	820	245	187	187	51	247	—
BN 160 L						254			304						780	670	864						

NOTE:
1) These values refer to the rear shaft end.
2) For FA07 brake value R=217.

Dimensions AD, AF, LL and V, relevant to terminal box of motors BN…FA featuring the separate brake supply (option SA), are coincident with corresponding dimensions of same-size BN…FD motors

ES hexagon is not supplied with PS option.

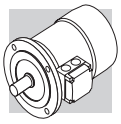

I

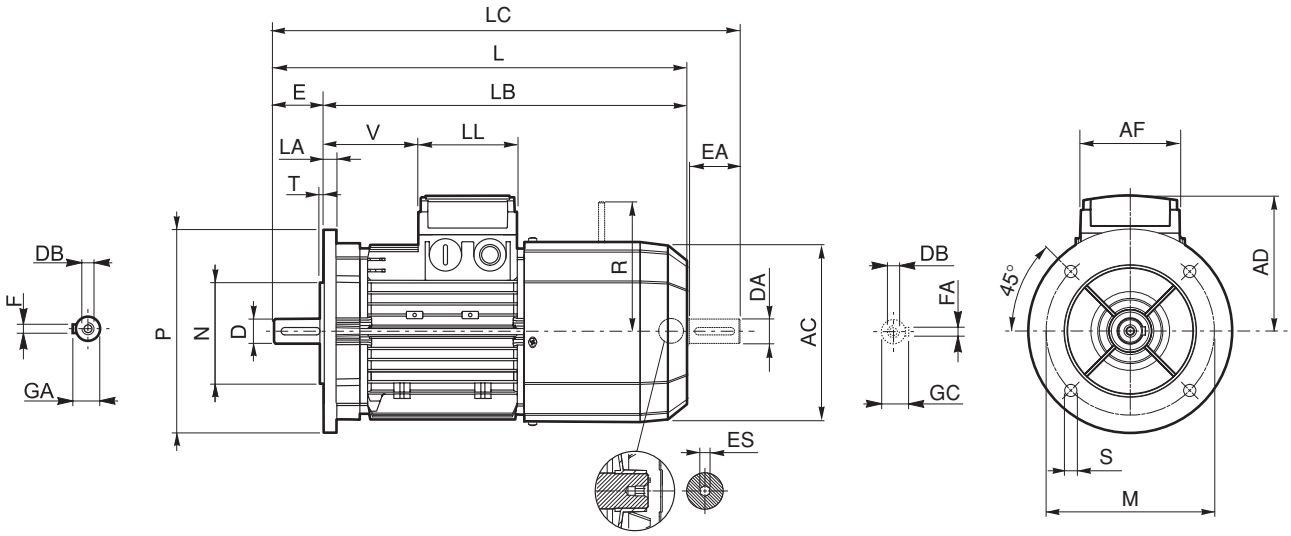

	Shaft					Flange						Motor									
	D DA	**E EA**	**DB**	**GA GC**	**F FA**	**M**	**N**	**P**	**S**	**T**	**LA**	**AC**	**L**	**LB**	**LC**	**AD**	**AF**	**LL**	**V**	**R**	**ES**
BN 63	11	23	M4	12.5	4	115	95	140	9.5	3	10	121	272	249	297	95	74	80	26	116	5
BN 71	14	30	M5	16	5	130	110	160		3.5		138	310	280	342	108			68	124	
BN 80	19	40	M6	21.5	6	165	130	200	11.5		11.5	156	346	306	388	119			83	134	
BN 90	24	50	M8	27	8							176	409	359	461	133	98	98	95	160	6
BN 100	28	60	M10	31		215	180	250	14	4	14	195	458	398	521	142			119		
BN 112											15	219	484	424	547	157			128	198	
BN 132	38	80	M12	41	10	265	230	300			20	258	603	523	686	210	140	188	46	200 (2)	
BN 160 MR	42 38 (1)	110 80 (1)	M16 M12 (1)	45 41 (1)	12 10 (1)	300	250	350	18.5	5	15		672	562	755	193	118	118	218	217	
BN 160 M												310	736	626	820	245	187	187	51	247	—
BN 160 L																					
BN 180 M				51.5 41 (1)	14 10 (1)								780	670	864						

NOTE:
1) These values refer to the rear shaft end.
2) For FA07 brake value R=217.

Dimensions AD, AF, LL and V, relevant to terminal box of motors BN…FA featuring the separate brake supply (option SA), are coincident with corresponding dimensions of same-size BN…FD motors

ES hexagon is not supplied with PS option.

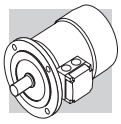

I 1

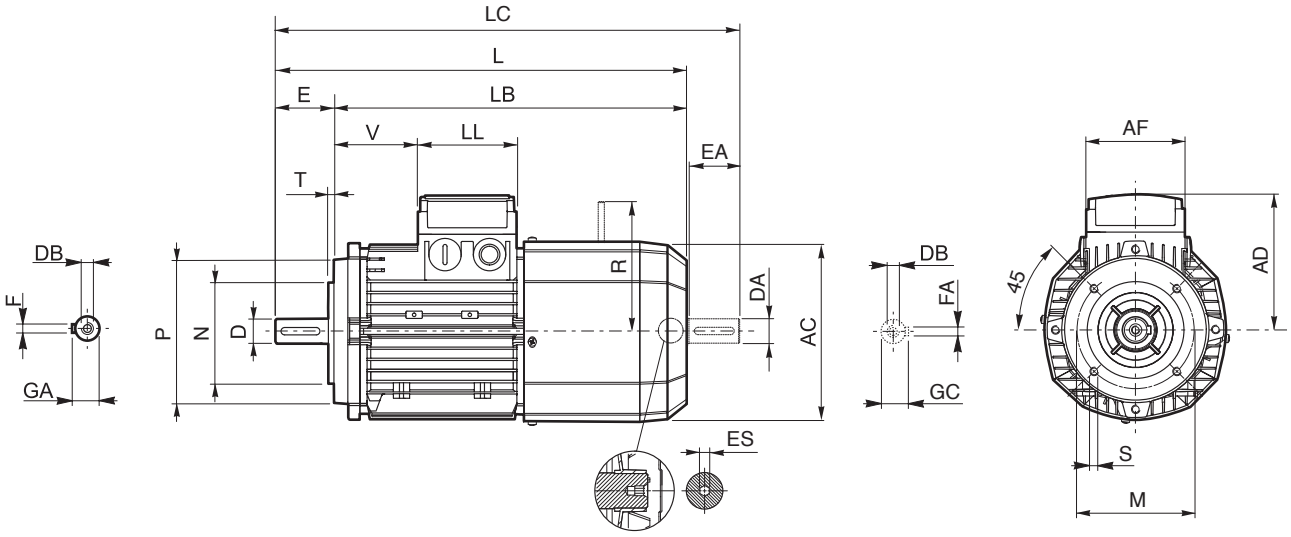

	Shaft					Flange					Motor									
	D DA	**E EA**	**DB**	**GA GC**	**F FA**	**M**	**N**	**P**	**S**	**T**	**AC**	**L**	**LB**	**LC**	**AD**	**AF**	**LL**	**V**	**R**	**ES**
BN 63	11	23	M4	12.5	4	75	60	90	M5	2.5	121	272	249	119	95	74	80	26	116	5
BN 71	14	30	M5	16	5	85	70	105	M6		138	310	280	342	108			68	124	
BN 80	19	40	M6	21.5	6	100	80	120		3	156	346	306	388	119			83	134	
BN 90	24	50	M8	27	8	115	95	140	M8		176	409	359	461	133	98	98	95	160	6
BN 100	28	60	M10	31		130	110	160		3.5	195	458	398	521	142			119		
BN 112											219	484	424	547	157			128	198	
BN 132	38	80	M12	41	10	165	130	200	M10	4	258	603	523	686	210	140	188	46	200 (1)	

NOTE:
1) For FA07 brake value R=217.

Dimensions AD, AF, LL and V, relevant to terminal box of motors BN…FA featuring the separate brake supply (option SA), are coincident with corresponding dimensions of same-size BN…FD motors

ES hexagon is not supplied with PS option.

INDEX OF REVISIONS

BR_CAT_BNEX_STD_ENG_R03_0	
	Description
...	Added the availability of brakes and CUS execution for BX motors.

170331

This publication supersedes and replaces any previous edition and revision. We reserve the right to implement modifications without notice.
This catalogue cannot be reproduced, even partially, without prior consent.

Bonfiglioli
Forever Forward

We have a relentless commitment to excellence, innovation & sustainability. Our team creates, distributes and services world-class power transmission & drive solutions to keep the world in motion.

HEADQUARTERS
Bonfiglioli Riduttori S.p.A.
Via Giovanni XXIII, 7/A
40012 Lippo di Calderara di Reno
Bologna (Italy)
tel: +39 051 647 3111
fax: +39 051 647 3126
bonfiglioli@bonfiglioli.com
www.bonfiglioli.com