Bonfiglioli
Vectron

Active

Solution Drive

PRODUCT

Bonfiglioli
Forever Forward

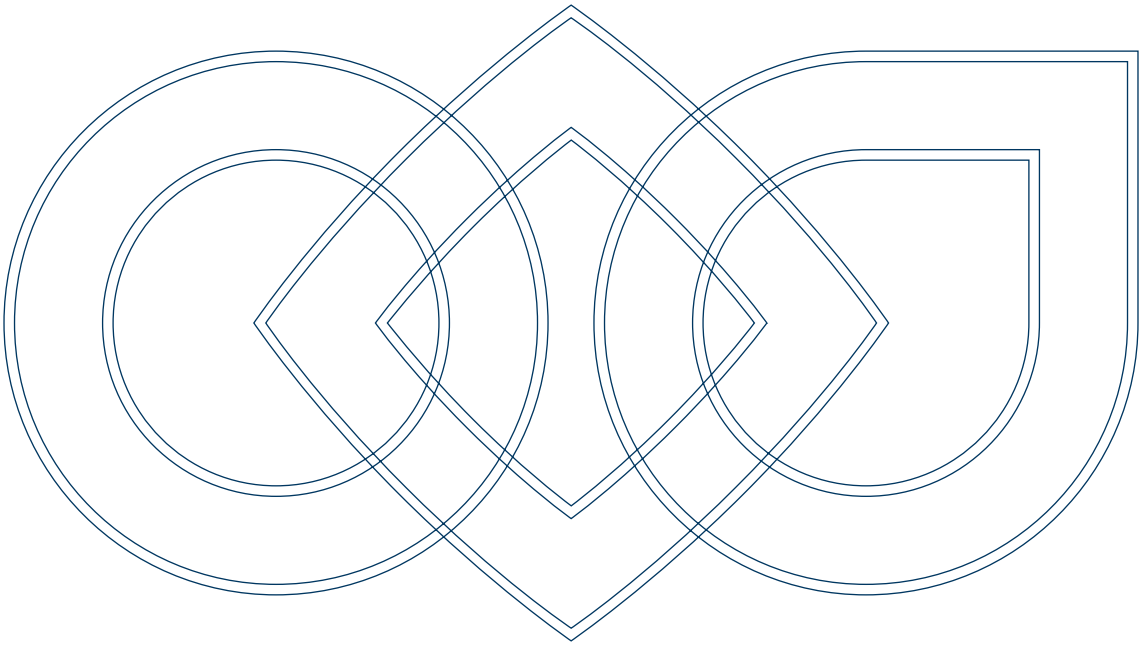

Bonfiglioli, one name for a large international group

It was back in 1956 that Clementino Bonfiglioli established in Bologna, Italy, the company that still bears his name. Now, some fifty years later, the same enthusiasm and dedication is driving Bonfiglioli to become the world's top name in power transmission and control solutions. Through directly controlled subsidiaries and production plant around the world, Bonfiglioli designs, manufactures and distributes a complete range of gearmotors, drive systems and planetary gearboxes, and boasts the most integrated offering on the market today.

In a market in which excellent product quality alone is no longer sufficient, Bonfiglioli also provides experience, know-how, an extensive sales network, excellent pre-sales and after-sales service and modern communication tools and systems to create high level solutions for industry, mobile machinery and renewable energy.

Bonfiglioli solutions

Innovative solutions for industrial field.

Bonfiglioli Riduttori today is one of the top brands in the power transmission industry.
The company's success is the result of a business strategy that relies on three fundamental factors: know-how, innovation and quality.
The complete range of Bonfiglioli brand gearmotors offers excellent technical characteristics and guarantees the highest performance. Substantial investment and technical expertise have enabled the company to achieve an annual production output of 1600000 units using completely automated processes.

Certification of the company's Quality System by DNV and TÜV is proof of the high quality standards achieved.
With the acquisition of the Vectron brand, Bonfiglioli is now established as leader of the industrial automation sector.

Bonfiglioli Vectron delivers products and services for completely integrated inverter solutions.
These solutions complement Bonfiglioli's power transmission and control offering to the industrial sector.

Since 1976, Bonfiglioli Trasmital's know-how in the power transmission industry has focused on special applications offering 100% reliability in the manufacturing of gearmotors for mobile machinery.

This includes the full range of slew and wheel drive applications and gearboxes for wind turbine pitch and yaw drive systems.
Today Bonfiglioli Trasmital stands at the forefront of the industry as a key partner to top manufacturers worldwide.

Solution Drive

Advanced technologies for all industrial fields.

Bonfiglioli Active frequency inverters are powerful and innovative units specifically designed to control electric motors in sophisticated automation systems.
Bonfiglioli Active range includes both single and three phase units for mains voltages of 230 V or 400 V, ranging from 0.55 kW to 132 kW.
Power ratings within Active range have been chosen to ensure a perfect match with Bonfiglioli motor ratings. The use of Active drives together with Bonfiglioli electric motors exploits at best technical synergy between these two product series.
Hardware flexibility is a fundamental feature of the Active series, and is achieved by means of a generous selection of expansion and communication modules that can be used to "configure" inverters to suit specific application requirements.
Active 401/201 is a "System Drive". Thanks to integrated PLC functions and wide connectivity with mostly used bus systems, Active 401/201 integrates seamlessly with a vast range of automation solutions.
Other main features of Active series:
- extremely compact dimensions
- accurate motor control and silent running, thanks to an 8 kHz switching frequency without derating
- easy mounting and connections, with a large number of panel mounting kits and easy disconnectable plug-in terminals
- exceptional software configurability through a streamlined, intuitive user interface
- versatile control, with very few configuration parameters needed to drive synchronous and asynchronous, feedback and sensorless, braked and brakeless motors
- choice of motor control technologies, including robust scalar control, vectorial sensorless control and accurate field-oriented feedback control: Active frequency converters provide an adequate level of accuracy and dynamics to satisfy the needs of a wide range of applications
- speed and position synchronisation in "multi-drive" automation systems
- extensive choice of accessories, all guaranteed and tested with Active drives, including mains side inductors, EMC filters and braking resistors

Active frequency inverters provide the perfect control solution for any application, from the simplest machine automation systems to the most complex control architectures granting perfectly repeatable high-tech results.

Designation

ACT201 series

Basic variants

ACT 201 | 13 | F | A

Optional variants

MPSV | EMSYS | CMCAN | KP500

Series
- **ACT 201** inverter ACTIVE 1ph/3ph x 200-240 VAC +/- 10%

Size 1
- **05** 0.55 kW
- **07** 0.75 kW
- **09** 1.1 kW

Size 2
- **11** 1.5 kW
- **13** 2.2 kW
- **15** 3.0 kW (only 3 ph)

Size 3
- **18** 4.0 kW (only 3 ph)
- **19** 5.5 kW (only 3 ph)

Size 4
- **21** 7.5 kW (only 3 ph)
- **22** 9.2 kW (only 3 ph)

EMI filter
- **F** internal filter
- **(blank)** no internal filter

Construction style
- **A** style with standard cooling
- **C** style with cold-plate cooling

Mounting kit
- **(blank)** standard panel mounting kit
- **MPSV** thru-type mechanical installation kit without fan
- **MDIN** DIN rail mechanical installation kit
- **MNVIB** antivibration mechanical installation kit

Expansion modules
- **(blank)** no expansion modules
- **EM-SYS** SYSTEMBUS expansion module
- **EM-IO-... (01, 02, 03, 04)** I/O expansion modules
- **EM-ENC-... (01, 02, 03, 04, 05)** ENCODER expansion modules
- **EM-RES-... (01, 02)** RESOLVER expansion modules

Communication modules
- **(blank)** no communication module
- **CM-CAN** CANopen communication module
- **CM-PDP** Profibus DP communication module
- **CM-232** RS232 serial communication module
- **CM-485** RS485 serial communication module

User interface
- **(blank)** no user interface
- **KP500** programming control unit
- **KP232** RS232 serial interface

ACT401 series

Basic variants

Optional variants

ACT 401 | 15 | F | A | MPSV | EMSYS | CMCAN | KP500

Series
ACT 401 inverter ACTIVE 3ph x 360-480VAC +/- 10%

Size 1
05 0.55 kW
07 0.75 kW
09 1.1 kW
11 1.5 kW

Size 2
12 1.85 kW
13 2.2 kW
15 3.0 kW
18 4.0 kW

Size 3
19 5.5 kW
21 7.5 kW
22 9.2 kW

Size 4
23 11 kW
25 15 kW

Size 5
27 18.5 kW
29 22 kW
31 30 kW

Size 6
33 37 kW
35 45 kW
37 55 kW
39 65 kW

Size 7
43 75 kW
45 90 kW
47 110 kW
49 132 kW

EMI filter
F internal filter
(blank) no internal filter

Construction style
A style with standard cooling
C style with cold-plate cooling

Mounting kit
(blank) standard panel mounting kit
MPSV thru-type mechanical installation kit without fan
MDIN DIN rail mechanical installation kit
MNVIB antivibration mechanical installation kit

Expansion modules
(blank) no expansion modules
EM-SYS SYSTEMBUS expansion module
EM-IO-... (01, 02, 03, 04) I/O expansion modules
EM-ENC-... (01, 02, 03, 04, 05) ENCODER expansion modules
EM-RES-... (01, 02) RESOLVER expansion modules

Communication modules
(blank) no communication module
CM-CAN CANopen communication module
CM-PDP Profibus DP communication module
CM-232 RS232 serial communication module
CM-485 RS485 serial communication module

User interface
(blank) no user interface
KP500 programming control unit
KP232 RS232 serial interface

Technical features
ACT201-05 ... ACT201-15 series

Power range up to 9.2 kW / 200-240 V three phase and 2.2 kW / 200-240 V single phase

Designation
ACT201

Size
From 0.55 to 1.1 kW / from 1.5 to 3.0 kW / from 4 to 5.5 kW / from 7.5 to 9.2 kW

Basic equipment
- 200 - 240 V single-phase and three-phase (± 10%) / 50 - 60 Hz (± 10%)
- TN and IT mains compatible
- overload capacity: 150% for 60s, 200% for 1s
- switching frequency 2 to 16 kHz
- integral EMI filter to EN 61800-3
- speed sensor connection
- integral braking transistor
- DC link connection
- plug-in power terminals up to 4 kW
- plug-in programmable control terminals
- 6 digital inputs, 1 multifunction input
- 1 digital output, 1 multifunction output
- relay output
- freely selectable motor control:
  sensorless control, sensorless field-oriented control,
  field-oriented control with speed sensor
- additional control and application systems available on request
- motor temperature monitoring
- Standard installation kit

Versions
Cold-plate finish on request

Expansions
- KP500: removable control unit with parameter copy function
- KP232: removable RS232 interface adapter
- CM-232: RS232 interface
- CM-485: RS485 interface
- CM-CAN: CANopen interface
- CM-PDP: Profibus-DP interface
- EM-I/O-01: I/O expansion (3xDI, 1xAI DC ± 10 V, 1xAO DC ± 10 V, 2xRelay, SYSTEMBUS)
- EM-I/O-02: I/O expansion (3xDI, 1xAI DC ± 10 V, 1xAO DC ± 10 V, 1xPTC, 1xRelay, SYSTEMBUS)
- EM-I/O-03: I/O expansion (2xDI, 1xAI DC ± 10 V, 1xAO DC ± 10 V, 1xAO 0-20 mA, 1xRelay, 1xPTC, SYSTEMBUS)
- EM-I/O-04: I/O expansion (1xDI/DO, 2xDI (PNP/NPN), 1xPTC/KTY, SYSTEMBUS)
- EM-ENC-01: expansion for Line Driver Incremental Speed Sensor at DC 5 V (input signals A, $\overline{A}$, B, $\overline{B}$, speed sensor signals repetition FFA, $\overline{FFA}$, FFB, $\overline{FFB}$, 1xAI DC ±10 V, SYSTEMBUS)
- EM-ENC-02: expansion for Line Driver Incremental Speed Sensor at DC 5 V (input signals A, $\overline{A}$, B, $\overline{B}$, 1xDI/DO, 1xAI DC (±10 V/± 20 mA), 1xAO DC 0/4-20 mA, PTC, SYSTEMBUS)
- EM-ENC-03: expansion for Line Driver Incremental Speed Sensor (input signals A, $\overline{A}$, B, $\overline{B}$, SYSTEMBUS). Speed sensor external power supply
- EM-ENC-04: expansion for Line Driver Incremental Speed Sensor at 5 V or 24 V with zero signal (input signals A, $\overline{A}$, B, $\overline{B}$, Z, $\overline{Z}$) 1xAI DC ± 10 V, 1xAO DC ± 10 V, 1xRelay
- EM-ENC-05: expansion for Line Driver Incremental Speed Sensor at 5 V or 24 V with zero signal (input signals A, $\overline{A}$, B, $\overline{B}$ Z, $\overline{Z}$) 1xAI DC ± 10 V, 1xAO DC ± 10 V, SYSTEMBUS
- EM-RES-01: expansion for Resolver (input signals SIN, COS, REF resolver power supply, repetition frequency output FFA, $\overline{FFA}$, FFB, $\overline{FFB}$, 1xAI (DC ± 10 V/± 20 mA)), SYSTEMBUS
- EM-RES-02: expansion for Resolver (input signals SIN, COS, REF resolver power supply, repetition frequency output FFA, $\overline{FFA}$, FFB, $\overline{FFB}$, frequency reference signal, 1xAI (DC ± 10 V/± 20 mA))
- EM-SYS: SYSTEMBUS expansion

Development tools
- VPlus: software for inverter programming and monitoring on PC with Windows operating system. Oscilloscope Function with 4 programmable traces

Accessories
- Installation kit: various mechanical installation kits (MPSV, MPVIB, MDIN) for different types of enclosure mounting solutions
- Line choke: input filter for reducing current harmonics
- EMI filter: Input filter for EMC regulation compliance
- dV/dt filter: output filter for dV/dt attenuation
- Sine wave filter: output filter for long inverter/motor cable
- Mains unit: PFC and network recovery of regeneration energy
- Braking Resistor: external resistor for dynamic braking

Technical features
ACT401-05 ... ACT401-49 series

Power range up to 132 kW / 360-480 V three-phase

Designation
ACT401

Size
From 0.55 to 1.5 kW / from 1.85 to 4.0 kW / from 5.5 to 9.2 kW / from 11 to 15 kW / from 18.5 to 30 kW / from 37 to 65 kW / from 75 to 132 kW

Basic equipment
- 360 - 480 V three-phase (± 10%) / 50 - 60 Hz (± 10%)
- TN and IT mains capable
- overload capacity: 150% for 60s, 200% for 1s
- switching frequency 2 to 16 kHz
- integral EMI filter to EN 61800-3 up to 7.5 kW
- speed sensor connection
- motor temperature monitoring
- integral braking transistor
- DC link connection
- plug-in power terminals up to 4 kW
- plug-in programmable control terminals
- 6 digital inputs, 1 multifunction input
- 1 digital output, 1 multifunction output
- relay output
- freely selectable motor control system: sensorless control, sensorless field-oriented control,
  field-oriented control with speed sensor
- additional control and application systems available on request
- Standard installation kit

Versions
Cold-plate finish on request

Expansions
- KP500: removable control unit with parameter copy function
- KP232: removable RS232 interface adapter
- CM-232: RS232 interface
- CM-485: RS485 interface
- CM-CAN: CANopen interface
- CM-PDP: Profibus-DP interface
- EM-I/O-01: I/O expansion (3xDI, 1xAI DC ± 10 V, 1xAO DC ± 10 V, 2xRelay, SYSTEMBUS)
- EM-I/O-02: I/O expansion (3xDI, 1xAI DC ± 10 V, 1xAO DC ± 10 V, 1xPTC, 1xRelay, SYSTEMBUS)
- EM-I/O-03: I/O expansion (2xDI, 1xAI DC ± 10 V, 1xAO DC ± 10 V, 1xAO 0-20 mA, 1xRelay, 1xPTC, SYSTEMBUS)
- EM-I/O-04: I/O expansion (1xDI/DO, 2xDI (PNP/NPN), 1xPTC/KTY, SYSTEMBUS)
- EM-ENC-01: expansion for Line Driver Incremental Speed Sensor at DC 5 V (input signals A, $\overline{A}$, B, $\overline{B}$, speed sensor signals repetition FFA, $\overline{FFA}$, FFB, $\overline{FFB}$, 1xAI DC ±10 V, SYSTEMBUS)
- EM-ENC-02: expansion for Line Driver Incremental Speed Sensor at DC 5 V (input signals A, $\overline{A}$, B, $\overline{B}$, 1xDI/DO, 1xAI DC (±10 V/± 20 mA), 1xAO DC 0/4-20 mA, PTC, SYSTEMBUS)
- EM-ENC-03: expansion for Line Driver Incremental Speed Sensor (input signals A, $\overline{A}$, B, $\overline{B}$, SYSTEMBUS). Speed sensor external power supply
- EM-ENC-04: expansion for Line Driver Incremental Speed Sensor at 5 V or 24 V with zero signal (input signals A, $\overline{A}$, B, $\overline{B}$ Z, $\overline{Z}$) 1xAI DC ± 10 V, 1xAO DC ± 10 V, 1xRelay
- EM-ENC-05: expansion for Line Driver Incremental Speed Sensor at 5 V or 24 V with zero signal (input signals A, $\overline{A}$, B, $\overline{B}$ Z, $\overline{Z}$) 1xAI DC ± 10 V, 1xAO DC ± 10 V, SYSTEMBUS
- EM-RES-01: expansion for Resolver (input signals SIN, COS, REF resolver power supply, repetition frequency output FFA, $\overline{FFA}$, FFB, $\overline{FFB}$, 1xAI (DC ± 10 V/± 20 mA)), SYSTEMBUS
- EM-RES-02: expansion for Resolver (input signals SIN, COS, REF resolver power supply, repetition frequency output FFA, $\overline{FFA}$, FFB, $\overline{FFB}$, frequency reference signal, 1xAI (DC ± 10 V/± 20 mA))
- EM-SYS: SYSTEMBUS expansion

Development tools
- VPlus: software for inverter programming and monitoring on PC with Windows operating system. Oscilloscope Function with 4 programmable traces

Accessories
- Installation kit: various mechanical installation kits (MPSV, MPVIB, MDIN) for different types of enclosure mounting solutions
- Line choke: input filter for reducing current harmonics
- EMI filter: input filter for EMC regulation compliance
- dV/dt filter: output filter for dV/dt attenuation
- Sine wave filter: output filter for long inverter/motor cable
- Mains unit: PFC and network recovery of regeneration energy
- Braking Resistor: external resistor for dynamic braking

Hardware

- Range of voltage area: 200 - 240 V single-phase and three-phase (± 10%), 360 - 480 V three-phase (±10%)
- TN and IT mains capable thanks to adaptation of basic devices
- Integral EMI filter to EN 61800-3 on devices up to 9.2 kW
- DC link bus for energy exchange and central power feeding
- Plug-in power terminals up to 4 kW
- Plug-in control terminals: ensures easy connection and separation of control terminals
- Multifunction input: ensures high flexibility in defining the reference value using a range of different signal sources
- Connection of digital inputs to software modules in the form of logic signals
- Multifunction output selectable from among a vast range of parameters
- Facility to connect digital outputs and relay output to the software modules for programming requirements
- Motor overtemperature protection by means of thermo-evaluation
- Speed sensor input for high dynamics applications requiring high precision speed and torque control
- Integral braking transistor to limit DC bus voltage in braking operation
- Folding type attachment for extremely compact installation
- DIN rail installation facility for units up to 4 kW
- Lateral installation facility for units up to 4 kW
- Construction with high IP protection ratings thanks to Cold-Plate option
- Supports master / slave operation in basic version for electronic gear applications and similar
- Optional expansion modules to extend control inputs and outputs
- Optional encoder modules to evaluate TTL & HTL encoder and Resolver
- Optional communication modules to connect to standard field bus networks and point-to-point connections
- KP500 control unit with copy function to facilitate parameterisation and control operations
- KP232 interface adapter for high communication flexibility via a serial protocol

Software

- Selectable motor control system:
  - sensorless control
  - sensorless field-oriented control
  - field-oriented control with speed sensor (FOC)
  - brushless motor
- Coupling with various reference value sources on reference frequency channel and reference percentage channel
- Intelligent current limits for load-dependant optimisation of operational behaviour
- Mains voltage monitoring enables programmable behaviour in the event of faults
- Use of kinetic energy in the drive system for power failure bridging or controlled motor stopping
  in mains power loss conditions
- Motor phase monitoring to avoid stressing the coupled load
- Speed sensor monitoring with continuous control of sensor signals
- Overload protection and automatic switching frequency adaptation
- Motor circuit breaker for protection of the connected motor
- Motor chopper function (reduces braking energy without brake unit)
- Programmable starting and stopping behaviour so the drive can be started, stopped, and controlled down to standstill
- S-ramp for separately adjustable acceleration and deceleration ramps and for smooth speed changes (jerk limitation)
- Motor potentiometer controlled via digital input, control unit and communication interface
- Four data sets for parameterisation of various operational behaviour modes
- Parameter identification of the connected motor (tuning) as a supplementary facility of the guided commissioning function
- Auto set-up of dependent parameters during guided commissioning procedure
- Synchronization function to catch a spinning motor
- Auto-start after alarm or power loss
- Automatic acknowledgement of selected faults without motor switch-off (pre-alarm)
- Integrated PI control let to implement (for example) pressure, volumetric flow or speed control (with tacho generator)
- Brake Control and Load Detection for lifting applications
- Programmable timer and logical functions included in the software modules
- Flow control to optimise operational behaviour
- Continuous torque monitoring for control of drive behaviour under load
- Surge-free speed / torque control switch-over
- System bus for transmission of parameter settings, actual and nominal values
- Positioning from reference point with programmable stopping behaviour
- Stability control in synchronous tie applications
- Memory of real mean and peak values
- Alarms video page and report generation with adjustable limits and behaviour responses
- Alarm memory and environment

General technical data

Environment

Operating temperature
- 0°C - 40°C (40°C - 55°C with derating)

Environment class
- Operation 3K3 (EN60721-3-3)
- Relative humidity 15% ... 85%, no moisture condensation

Altitude of installation
- Up to 1000m (up to 4000 with derating)

Storage conditions
- According to EN50178

Protection degree
- IP20

Electrical

Rated mains voltage
- ACT 201 in the range 184 ... 264 V
  ACT 401 in the range 320 ... 528 V

Rated mains frequency
- 45 ... 66 Hz

Overload current
- 150% of rated current (200% for 0.25 and 0.37 kW)

Peak current
- 200% of rated current for most ratings

Electric protection
- Short circuit / Earth fault proof

Braking transistor
- Built-in on standard devices

Standards

CE conformity:
- Low voltage directive 73/23/EEC and EN50178 / DIN VDE 0160 and EN61800

Interference immunity
- According to EN 61800-3 for use in industrial environments

UL approval
- UL marked, according to UL508c

ACT201 - Technical data (from 0.55 to 3.0 kW)

ACT201-			05	07	09	11	13	15
			Size 1 (F, A or C)			Size 2 (F, A or C)		
Output, motor side								
Recommended rated motor power	P_n	kW	0.55	0.75	1.1	1.5	2.2	3.0
Rated motor current output	I_n	A	3.0	4.0	5.5	7.0	9.5	12.5
Rated motor voltage output	U_n	V	3 x (from 0 to mains voltage)					
Overload current for 60 s	I_{pk}	A	4.5	6.0	7.3	10.5	14.3	16.2
Overload current for 1 s	I_{pk}	A	6.0	8.0	8.0	14.0	19.0	19.0
Switching frequency	f_c	kHz	From 2 to 16					
Rated motor frequency	f_n	Hz	From 0 to 1000					
Input, mains side								
Nominal mains voltage	U	V	184 ... 264					
Nominal mains frequency	f	Hz	45 ... 66					
Nominal current 3 ph/PE	I	A	3.0	4.0	5.5	7.0	9.5	10.5
Nominal current 1 ph/N/PE; 2 ph/PE	I	A	5.4	7.2	9.5	13.2	16.5	16.5
EMI filter	-	-	Built-in					
General								
Short circuit / ground fault protection	-	-	Yes, unlimited					
Mounting position	-	-	Vertical					
Protection class	-	-	IP 20 (EN60529)					
Dimensions Std. A	HxWxD	mm	190 x 60 x 175			250 x 60 x 175		
Cold Plate Opt. C	HxWxD	mm	190 x 82 x 140			250 x 85 x 140		
Weight (approx.)	m	kg	1.2			1.6		
Environment								
Cooling temperature	T_n	°C	From 0 to 40 (3K3 DIN IEC 721-3-3)					
Relative air humidity	-	%	From 15 to 85, non-condensing					
Derating	P	-	2,5%/K above 40°C; Tmax = 55°C; 5%/1000m above 1000m installation altitude; hmax = 4000m					
Options & accessories								
Line choke	-	-	External (depending on mains supply)					
EMI filter	-	-	Internal (EN 61800-3); external					
Brake unit	-	-	Internal brake transistor					
Digital control unit	-	-	Yes					

ACT201 - Technical data (from 4.0 to 9.2 kW)

ACT201-			18	19	21	22
			Size 3 (- or F, A or C)		Size 4 (-, A or C)	
Output, motor side						
Recommended rated motor power	P_n	kW	4.0	5.5	7.5	9.2
Rated motor current output	I_n	A	18.0	22.0	32.0	35.0
Rated motor voltage output	U_n	V	3 x (from 0 to mains voltage)			
Overload current for 60 s	I_{pk}	A	26.2	30.3	44.5	51.5
Overload current for 1 s	I_{pk}	A	33.0	33.0	64.0	64.0
Switching frequency	f_c	kHz	From 2 to 16			
Rated motor frequency	f_n	Hz	From 0 to 1000			
Input, mains side						
Nominal mains voltage	U	V	184 ... 264			
Nominal mains frequency	f	Hz	45 ... 66			
Nominal current 3 ph/PE	I	A	18	20	28.2	35.6
Mains fuses 3 ph/PE	I	A	25		35	50
General						
Short circuit / ground fault protection	-	-	Yes, unlimited			
Mounting position	-	-	Vertical			
Protection class	-	-	IP 20 (EN60529)(0)			
Dimensions Std. A	HxWxD	mm	250 x 100 x 200		250 x 125 x 200	
Cold Plate Opt. C	HxWxD	mm	—			
Weight (approx.)	m	kg	3.0		3.7	
Environment						
Cooling temperature	T_n	°C	From 0 to 40 (3K3 DIN IEC 721-3-3)			
Relative air humidity	-	%	From 15 to 85, non-condensing			
Derating	P	-	2.5%/K above 40 °C; Tmax = 55 °C; 5%/1000 m above 1000 m installation altitude; hmax = 4000m			
Options & accessories						
Line choke	-	-	External (depending on mains supply)			
EMI filter	-	-	Internal (EN 61800-3); External			
Brake unit	-	-	Internal brake transistor			
Digital control unit	-	-	Yes			

Note: (0) = for protection classes higher than IP20 consult your local Bonfiglioli Drives Service Center

ACT401 - Technical data (from 0.55 to 3.0 kW)

ACT401-			05	07	09	11	12	13	15
				Size 1 (F, A or C)			Size 2 (F, A or C)		
Output, motor side									
Recommended rated motor power	P_n	kW	0.55	0.75	1.1	1.5	1.85	2.2	3.0
Rated motor current output	I_n	A	1.8	2.4	3.2	3.8	4.2	5.8	7.8
Rated motor voltage output	U_n	V	3 x (from 0 to mains voltage)						
Overload current for 60 s	I_{pk}	A	2.7	3.6	4.8	5.7	6.3	8.7	11.7
Overload current for 1 s	I_{pk}	A	3.6	4.8	6.4	7.6	8.4	11.6	15.6
Switching frequency	f_c	kHz	From 2 to 16						
Rated motor frequency	f_n	Hz	From 0 to 1000						
Input, mains side									
Nominal mains voltage	U	V	320 ... 528						
Nominal mains frequency	f	Hz	45 ... 66						
Nominal current 3 ph/PE	I	A	1.8	2.4	2.8	3.3	4.2	5.8	6.8
Mains fuses 3 ph/PE	I	A	6				10		
General									
Short circuit / ground fault protection	-	-	Yes, unlimited						
Mounting position	-	-	Vertical						
Protection class	-	-	IP 20 (EN60529)(0)						
Dimensions Std. A	HxWxD	mm	190 x 60 x 175				250 x 60 x 175		
Cold Plate Opt. C	HxWxD	mm	190 x 82 x 140				250 x 85 x 140		
Weight (approx.)	m	kg	1.2				1.6		
Environment									
Cooling temperature	T_n	°C	From 0 to 40 (3K3 DIN IEC 721-3-3)						
Relative air humidity	-	%	From 15 to 85, non-condensing						
Derating	P	-	2.5%/K above 40 °C; Tmax = 55 °C; 5%/1000 m above 1000 m installation altitude; hmax = 4000m						
Options & accessories									
Line choke	-	-	External (depending on mains supply)						
EMI filter	-	-	Internal (EN 61800-3); External						
Brake unit	-	-	Internal brake transistor						
Digital control unit	-	-	Yes						

Note: (0) = for protection classes higher than IP20 consult your local Bonfiglioli Drives Service Center

ACT401 - Technical data (from 4.0 to 15 kW)

ACT401-			18	19	21	22	23	25
			Size 2 (F, A2 or C2)	Size 3 (- or F, A or C)			Size 4 (-, A or C)	
Output, motor side								
Recommended rated motor power	P_n	kW	4.0	5.5	7.5	9.2	11.0	15.0
Rated motor current output	I_n	A	9.0	14.0	18.0	22.0	25.0	32.0
Rated motor voltage output	U_n	V	3 x (from 0 to mains voltage)					
Overload current for 60 s	I_{pk}	A	13.5	21.0	26.3	30.3	37.5	44.5
Overload current for 1 s	I_{pk}	A	18.0	28.0	33.0	33.0	50.0	64.0
Switching frequency	f_c	kHz	From 2 to 16					
Rated motor frequency	f_n	Hz	From 0 to 1000					
Input, mains side								
Nominal mains voltage	U	V	320 ... 528					
Nominal mains frequency	f	Hz	45 ... 66					
Nominal current 3 ph/PE	I	A	7.8	14.2	15.8	20.0	26.0	28.2
Mains fuses 3 ph/PE	I	A	10.0	16.0	25.0		35.0	
General								
Short circuit / ground fault protection	-	-	Yes, unlimited					
Mounting position	-	-	Vertical					
Protection class	-	-	IP 20 (EN60529)(0)					
Dimensions Std. A	HxWxD	mm	250 x 60 x 175	250 x 100 x 200			250 x 125 x 200	
Cold Plate Opt. C	HxWxD	mm	250 x 85 x 140	250 x 125 x 144			250 x 150 x 144	
Weight (approx.)	m	kg	1.6	3.0			3.7	
Environment								
Cooling temperature	T_n	°C	From 0 to 40 (3K3 DIN IEC 721-3-3)					
Relative air humidity	-	%	From 15 to 85, non-condensing					
Derating	P	-	2.5%/K above 40 °C; Tmax = 55 °C; 5%/1000 m above 1000 m installation altitude; hmax = 4000 m					
Options & accessories								
Line choke	-	-	External (depending on mains supply)					
EMI filter	-	-	Internal (EN 61800-3); External				External	
Brake unit	-	-	Internal brake transistor					
Digital control unit	-	-	Yes					

Note: (0) = for protection classes higher than IP20 consult your local Bonfiglioli Drives Service Center

ACT401 - Technical data (from 18.5 to 30 kW)

ACT401-			27	29	31
				Size 5 (-, A or C)	
Output, motor side					
Recommended rated motor power	P_n	kW	18.5	22.0	30.0
Rated motor current output	I_n	A	40.0	45.0	60.0
Rated motor voltage output	U_n	V	3 x (from 0 to mains voltage)		
Overload current for 60 s	I_{pk}	A	60.0	67.5	90.0
Overload current for 1 s	I_{pk}	A	80.0	90.0	120.0
Switching frequency	f_c	kHz	From 2 to 8		
Rated motor frequency	f_n	Hz	From 0 to 1000		
Input, mains side					
Nominal mains voltage	U	V	320 ... 528		
Nominal mains frequency	f	Hz	45 ... 66		
Nominal current 3 ph/PE	I	A	35.6	52.0	58.0
Mains fuses 3 ph/PE	I	A	50.0		63.0
General					
Short circuit / ground fault protection	-	-	Yes, unlimited		
Mounting position	-	-	Vertical		
Protection class	-	-	IP 20 (EN60529)(0)		
Dimensions Std. A	HxWxD	mm	250 x 200 x 260		
Cold Plate Opt. C	HxWxD	mm	250 x 225 x 171		
Weight (approx.)	m	kg	8.0		
Environment					
Cooling temperature	T_n	°C	From 0 to 40 (3K3 DIN IEC 721-3-3)		
Relative air humidity	-	%	From 15 to 85, non-condensing		
Derating	P	-	2.5%/K above 40 °C; Tmax = 55 °C; 5%/1000 m above 1000 m installation altitude; hmax = 4000 m		
Options & accessories					
Line choke	-	-	External (depending on mains supply)		
EMI filter	-	-	External		
Brake unit	-	-	Internal brake transistor		
Digital control unit	-	-	Yes		

Note: (0) = for protection classes higher than IP20 consult your local Bonfiglioli Drives Service Center

ACT401 - Technical data (from 37 to 65 kW)

ACT401-			33	35	37	39
				Size 6 (-, A)		
Output, motor side						
Recommended rated motor power	P_n	kW	37.0	45.0	55.0	65.0
Rated motor current output	I_n	A	75.0	90.0	110.0	125.0
Rated motor voltage output	U_n	V	3 x (from 0 to mains voltage)			
Overload current for 60 s	I_{pk}	A	112.5	135.0	165.0	187.5
Overload current for 1 s	I_{pk}	A	150.0	180.0	220.0	250.0
Switching frequency	f_c	kHz	From 2 to 8			
Rated motor frequency	f_n	Hz	From 0 to 1000			
Input, mains side						
Nominal mains voltage	U	V	320 ... 528			
Nominal mains frequency	f	Hz	45 ... 66			
Nominal current 3 ph/PE	I	A	72	86	105	120
Mains fuses 3 ph/PE	I	A	80	100	125	125
General						
Short circuit / ground fault protection	-	-	Yes, unlimited			
Mounting position	-	-	Vertical			
Protection class	-	-	IP 20 (EN60529)(0)			
Dimensions Std. A	HxWxD	mm	400 x 275 x 260			
Cold Plate Opt. C	HxWxD	mm	—			
Weight (approx.)	m	kg	20			
Environment						
Cooling temperature	T_n	°C	From 0 to 40 (3K3 DIN IEC 721-3-3)			
Relative air humidity	-	%	From 15 to 85, non-condensing			
Derating	P	-	2.5%/K above 40 °C; Tmax = 55 °C; 5%/1000 m above 1000 m installation altitude; hmax = 4000 m			
Options & accessories						
Line choke	-	-	External (depending on mains supply)			
EMI filter	-	-	External			
Brake unit	-	-	Internal brake transistor			
Digital control unit	-	-	Yes			

Note: (0) = for protection classes higher than IP20 consult your local Bonfiglioli Drives Service Center

ACT401 - Technical data (from 75 to 132 kW)

ACT401-			43	45	47	49
				Size 7 (-, A)		
Output, motor side						
Recommended rated motor power	P_n	kW	75.0	90.0	110.0	132.0
Rated motor current output	I_n	A	150.0	180.0	210.0	250.0
Rated motor voltage output	U_n	V	3 x (from 0 to mains voltage)			
Overload current for 60 s	I_{pk}	A	225.0	270.0	315.0	332.0
Overload current for 1 s	I_{pk}	A	270.0	325.0	375.0	375.0
Switching frequency	f_c	kHz	From 2 to 8			
Rated motor frequency	f_n	Hz	From 0 to 1000			
Input, mains side						
Nominal mains voltage	U	V	320 ... 528			
Nominal mains frequency	f	Hz	45 ... 66			
Nominal current 3 ph/PE	I	A	143	172	208	249
Mains fuses 3 ph/PE	I	A	160	200	250	315
General						
Short circuit / ground fault protection	-	-	Yes, unlimited			
Mounting position	-	-	Vertical			
Protection class	-	-	IP 20 (EN60529)(0)			
Dimensions Std. A	HxWxD	mm	510 x 412 x 351			
Cold Plate Opt. C	HxWxD	mm	—			
Weight (approx.)	m	kg	45		48	
Environment						
Cooling temperature	T_n	°C	From 0 to 40 (3K3 DIN IEC 721-3-3)			
Relative air humidity	-	%	From 15 to 85, non-condensing			
Derating	P	-	2.5%/K above 40 °C; Tmax = 55 °C; 5%/1000 m above 1000 m installation altitude; hmax = 4000 m			
Options & accessories						
Line choke	-	-	External (depending on mains supply)			
EMI filter	-	-	External			
Brake unit	-	-	Optional internal brake transistor			
Digital control unit	-	-	Yes			

Note: (0) = for protection classes higher than IP20 consult your local Bonfiglioli Drives Service Center

Inverter selection criteria

Choosing the product size with the ACT 401/201 series is even simpler: one model for each motor power size.

In addition, the new sizes correspond perfectly to the motor sizes in the BONFIGLIOLI range.

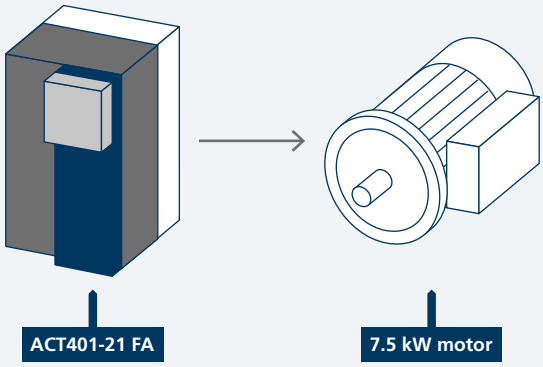

Inverter Derating

Installation altitude

Power supply reduction (derating):
5%/1000 m a.s.l.; hmax = 4000 m

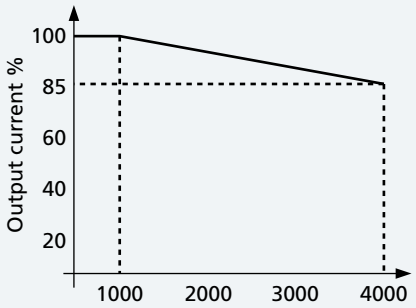

Max. cooling temperature
3.3°C/1000 m above 1000 m a.s.l.

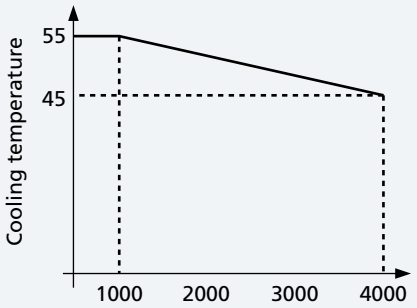

Installation altitude in metres above sea level

Cooling temperature

Derating in relation to installation temperature 2.5%/K above 40°C; Tmax = 55°C

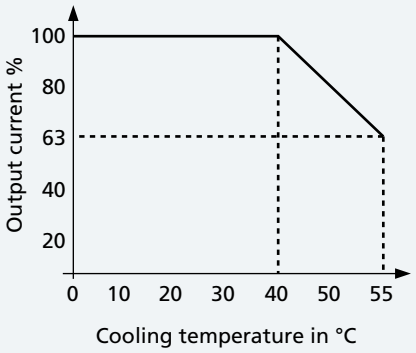

Mains voltage

Derating in relation to power feeding voltage 0.22%/V beyond 400V; Vmax = 480V

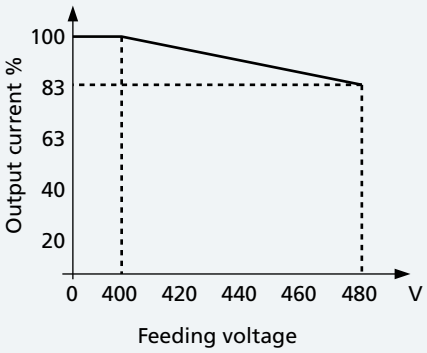

Optional components

Thanks to the modularity of their hardware components, ACTIVE frequency inverters are easily integrated in automation applications. Optional on-board modules are automatically recognised by the inverter when present (plug and play) right from the initialisation phase, and the internal control functions of the unit are automatically adapted accordingly.
The modules available for connector **A** (see figure) can be plugged into the inverter directly, while the cover must be removed in order to gain access to plug-in sections **B** and **C**. If a communication module is added to section B the perforated part of the cover must be eliminated. Further information on installation and management of the optional modules is given in the specific documentation (optional equipment user handbooks).

Hardware modularity

A) Interface module
Connection of optional control unit KP500, serial interface adapter KP232, or the control unit remotisation cable for accessory KPCMK

B) CM communication module
Connection panel for various communication protocols:
- CM-232, RS232 interface
- CM-485, RS485 interface
- CM-PDP, Profibus-DP interface
- CM-CAN, CANopen interface
- Other protocols on request

C) EM expansion module
Connection panel for adaptation of control inputs and outputs to the various applications on the basis of specific customer requirements:
- EM-IO, analog and digital inputs and outputs, available in 4 variants
- EM-ENC, speed sensor interface, frequency output and system bus, available in 5 variants
- EM-RES, resolver interface, frequency output and system bus, available in 2 variants
- EM-SYS, system bus for Systembus communication (On request, system bus combined with CM-CAN communication module)
- Other personalisable modules on request

A single module at a time taken from each corresponding list can be installed in each location (A, B, C). The modules of each seat are compatible with those of the other two, with the exception of CM-CAN and EM-SYS, which cannot be installed together on the same inverter.
KP232 and CM-232 are two RS232 serial interfaces accommodated in different locations. The two interfaces are mutually compatible but feature different communication speeds. Only KP232 is compatible with the use of the Oscilloscope function forming part of the VPlus management software.

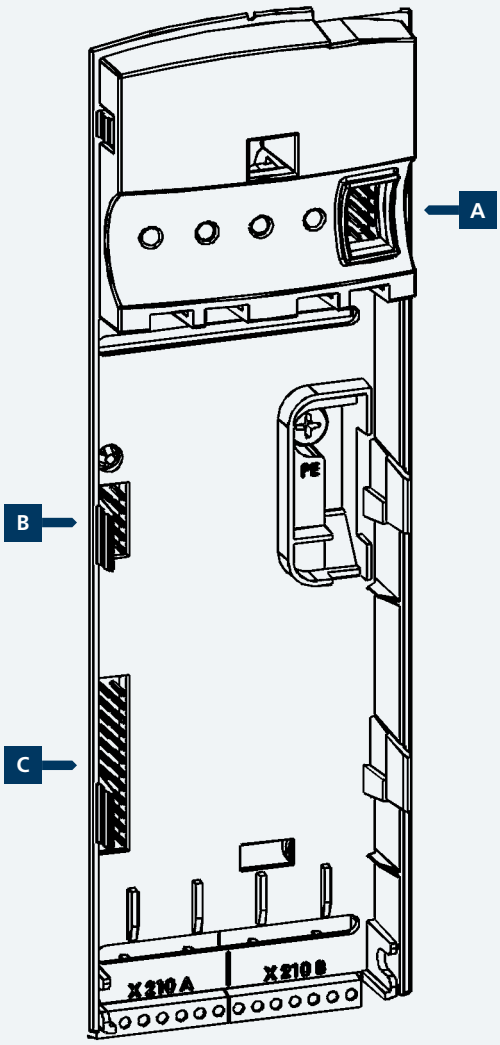

Control unit / KP500

The KP500 control unit is equipped with a Parameters Copy function that allows the user to upload parametric values from the inverter to a non-volatile memory installed in the KP500 device, allowing the same values to be subsequently downloaded to another inverter.
The control unit makes it possible to set up the inverter for specific applications and allows the display of the service values of physical and electrical parameters.
The inverter can also be controlled from the control unit for start/stop and frequency reference increase/decrease commands. Since the control unit is not essential for inverter operation it can be connected when the user considers it useful or necessary.

Control unit remote installation kit / KPCMK
The KPCMK kit is used to remotely control the inverter from the KP500 unit.

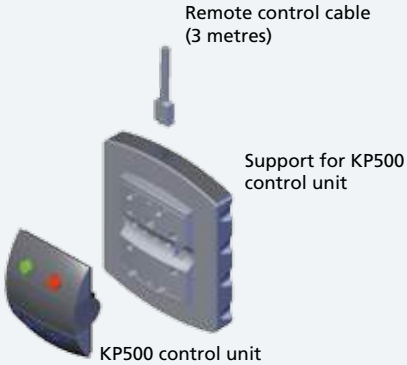

Handheld remote control unit

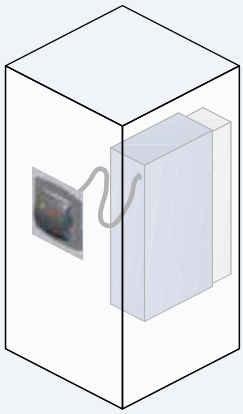

Remote installation on exterior of enclosure

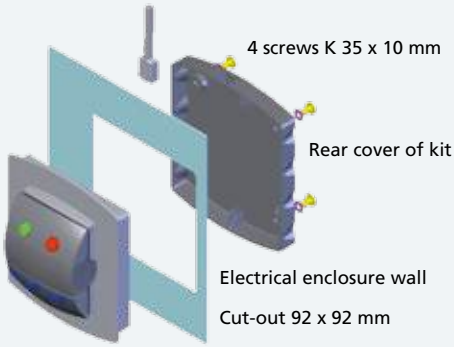

Fixing to enclosure

Interface / KP-232

Serial interface KP232 can be used as an alternative to control unit KP500. This connection enables parameterisation, monitoring, setting management, inverter control and even commissioning from a PC or laptop computer. The serial point-to-point connection between inverter and PC complies with specifications for transmission between data terminals (DTE) and data communication equipment (DCE), requiring, in this mode, a serial pin-to-pin cable with DB9 male connector on the inverter side. The KP232 interface is compatible with lines no longer than 15 metres. The serial transmission protocol ensures high data security and does not require handshake signals between computer and inverter. The VPlus software application can be supplied as an accessory. This program, which runs in Windows, is dedicated to the complete management of the ACTIVE inverter from a PC, including the functions of commissioning and parameterisation, which calls for the presence of hardware interface KP232, CM232 or CM485. The VPlus package also includes a digital Oscilloscope Function. The oscilloscope has four traces configurable for inverter monitoring also with graphic capabilities.

Technical data

Baud rate (kBaud)	Up to 115.2 kb

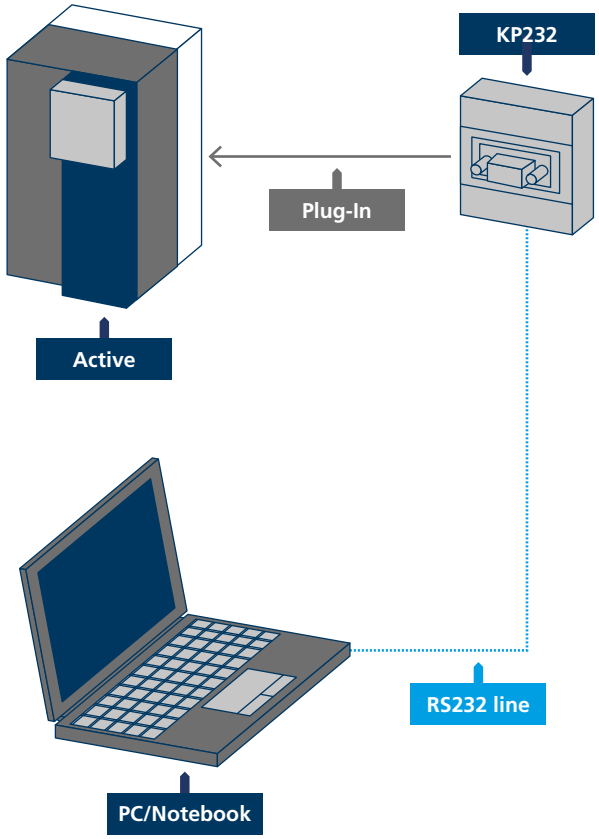

RS232 / CM-232 serial communication

The optional CM-232 communication card enables RS232 serial connection of the ACTIVE inverter to an external control device or PC to ANSI standard EIA/TIA-232E and CCITT V.28. The standard defines the electrical and mechanical characteristics of serial connections between data terminating equipment (DTE) and data communication equipment (DCE).
The serial interface, in the form of a DB9 plug, features DCE type pinouts.
The serial transmission protocol guarantees high data security and allows connection, also without handshake signals, thereby reducing the required number of connection lines to just three.
Maximum allowed distance between the various bus nodes (inverters) and the master (PC, PLC) depends on the cable used and the selected transmission rate.
This option can be used as well for inverter programming and monitoring with VPlus software.

Cable lenght	Max Baud rate
up to 30m	19.2
up to 10m	115.2

Cable length limits the transmission bandwith. Above table shows the match between admissible cable lengths and corresponding max kBaud rates. Values are indicative and may significantly change in relation to the transmission cable characteristics.

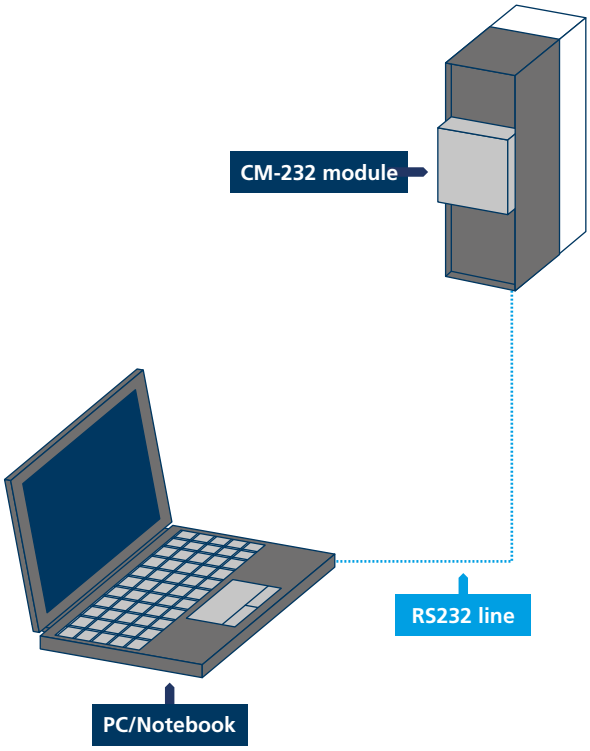

Location of CM-232 module on the frequency inverter

RS485 / CM-485 serial communication

The CM-485 communication module is designed for high speed data transmission over long distances in industrial applications. RS485 bus supports data exchange among 30 nodes in a bidirectional 2-wires system.
The interface is based on a DB9 connector, following the standards for physical transmission of data ITU V.11 and ANSI EIA/TIA-422B
CM-485 communication card includes the end-of-line terminating resistor that can be activated or disconnected by means of an on-board dip switch.
The RS485 network address of the inverter is set by software parameters either via KP500 control unit or by means of PC in serial communication with KP-232. The RS485 complies with ISO standard 1745 for code-bound data transmission. The standard data exchange rate and monitoring functions can be set using VPlus software.

Cable lenght	Max Baud rate
up to 12000m	4.8
up to 2000m	19.2

Cable length limits the transmission bandwith. Above table shows the match between admissible cable lengths and corresponding max kBaud rates. Values are indicative and may significantly change in relation to the transmission cable characteristics.

Location of CM-485 module on the frequency inverter

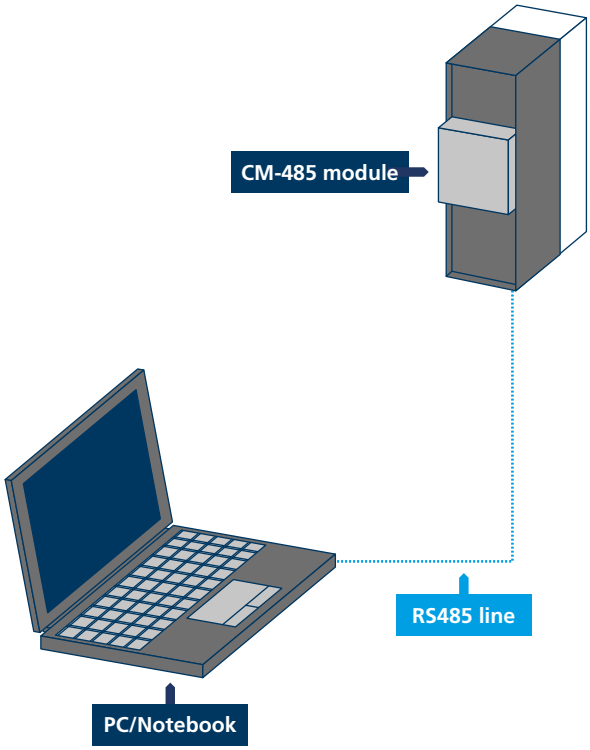

RS485 / CM-485
serial and Modbus communication

Modbus communication

The communication module CM-485 allows to use the Modbus Communication profile to be used. The communication profile can be easily changed to Modbus with a parameter. Therefore a very inexpensive solution is available to integrate the Active inverters in a Modbus Communication environment with the standard Active devices and a standard module.
There are two profiles available. The Modbus RTU profile is well established and known to the experienced Modbus user, which offers quick communication between different devices. Additonally, Modbus ASCII is supported as well, which allows easy set up and diagnosis of the communication between different devices.
The address range allows values in the range between 1 to 247.

Cable lenght	Max Baud rate
up to 12000m	4.8
up to 2000m	19.2

Cable length limits the transmission bandwith. Above table shows the match between admissible cable lengths and corresponding max kBaud rates. Values are indicative and may significantly change in relation to the transmission cable characteristics.

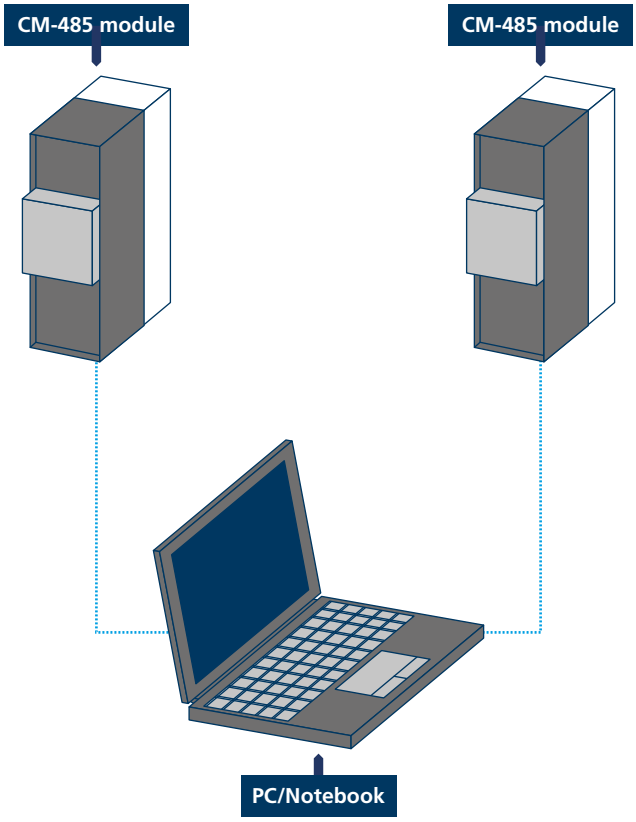

Location of module CM-485 on the frequency inverter

DP / CM-PDP
Profibus Communication

Internal dipswitch to enable the 220 Ω terminating burden resistor incorporated in the module

Profibus DP interface fulfils fieldbus standard DIN 19245. This Profibus version, which is optimized in order to provide excellent performance in terms of speed and low connection costs, has been adapted for communication between automation systems and decentralized peripheral devices.
Following "variable speed drive" profiles defined by Profidrive for electrical drive technology are supported by CMP-DP: PPO1, PPO2, PPO3, PPO4.
CM-PDP interface supports different transmission rates in compliance with EN 50170 standard. The transmission rate automatically adjusts to the settings of the fieldbus master.
CM-PDP module is equipped with a DIP switch to activate end-of-line terminating resistor, included into CM-PDP.

Cable lenght	Max Baud rate
up to 1200m	93.75
up to 1000m	187.5
up to 400m	500
up to 200m	1500
up to 100m	12000

Cable length limits the transmission bandwith. Above table shows the match between admissible cable lengths and corresponding max kBaud rates. Values are indicative and may significantly change in relation to the transmission cable characteristics.

Location of module CM-PDP on the frequency inverter

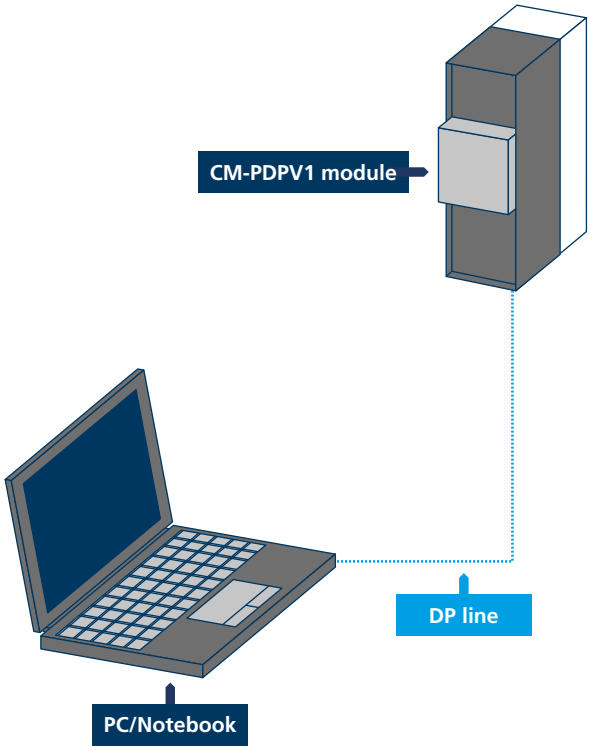

CANopen/ CM-CAN communication

The CM-CAN communication option with controller area network interface, complies with ISO/DIS 11898 transmission standard. The pinout of connector DB9 is based on the "CAN in Automation e.V." specification, which allows the connection of up to 127 nodes in the network. The network node addresses are assigned via software. The endburden resistor is activated by means of a DIP switch on the module. The end of line terminating current transmission protocol complies with CANopen specifications DS-301 V4.02. The maximum allowed distance between the bus nodes depends on the cable used and the selected transmission rate. See table.

Internal dipswitch to enable the terminating resistor incorporated in the module

Cable lenght	Max Baud rate
up to 5000m	10
up to 2500m	20
up to 1000m	50
up to 800m	100
up to 500m	125
up to 250m	250
up to 100m	500
up to 25m	1000

Cable length limits the transmission bandwith. Above table shows the match between admissible cable lengths and corresponding max kBaud rates. Values are indicative and may significantly change in relation to the transmission cable characteristics.

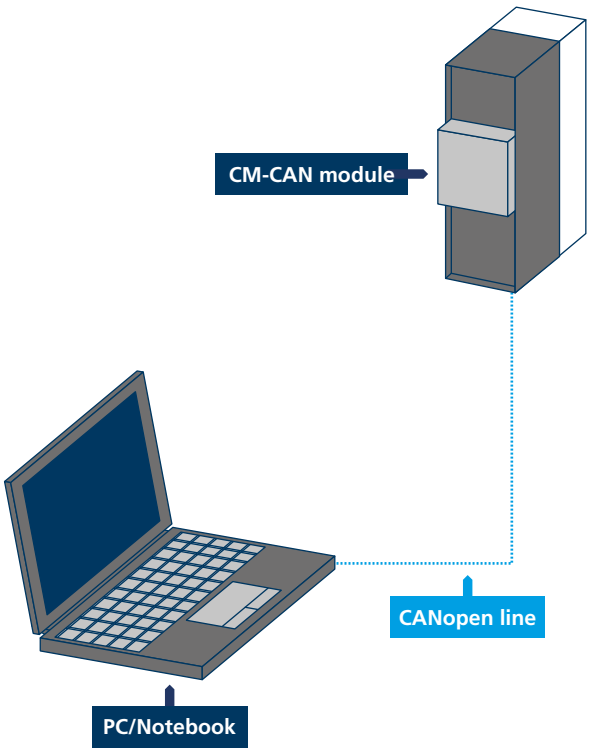

Location of CM-CAN module on the frequency inverter

System bus / EM-SYS module

The "System Bus" of Active inverters is a proprietary communication bus, based on CANopen protocol that allows fast exchange of data between the inverters and access, by a system bus master, to the parameters of all devices connected on the network.
The system bus nodes (max. 64) are connected by a two-wire line.
The Bus termination (at either first or last node) can be activated via DIP switches of the EM-SYS module.
The system bus is equipped with three PDO (Process Data Object) channels that allow rapid exchanges of process data for each inverter. There are also two SDO (Service Data Object) channels for parameterisation purposes.
Thanks to the three PDO channels, with one transmission and one reception channel, all inverter data can be transmitted. Among other advantages, this makes it possible to create master/slave and daisy chain configurations easily, while ensuring very high precision and speed.

Each transmission and reception channel includes 8 bytes that can be freely occupied by objects, thereby offering the maximum flexibility for a very broad range of applications. The selection of transmission objects and reception objects is made easy by the VPlus program, and no additional configuration tools are needed.

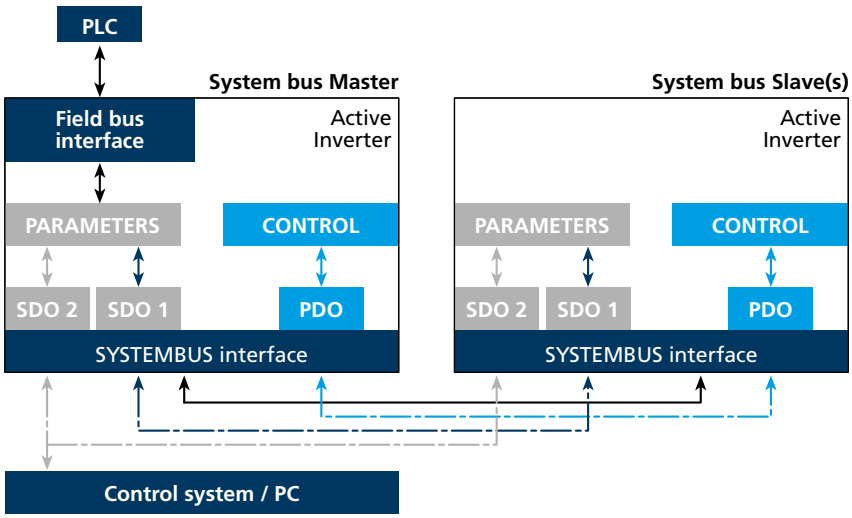

Location of EM-SYS module on the frequency inverter

Input-output module / EM-IO-01

The EM-IO-01 expansion modules extends the number of the standard inputs and outputs provided on the ACT inverter for connection of various applications.
Analog inputs and outputs can be available also with bipolar signals and must therefore be configured with inverter parameters.
The supplementary digital inputs provided on the expansion module are electrically equivalent to the standard inputs. The relay changer contact constitutes an alternative for the activation of high power with respect to the relay output available as a standard feature.
The SYSTEMBUS is available on two control terminals and supports easy control of decentralised drive systems.
The module is equipped with a removable terminal board divided into two parts (X410A and X410B) that are physically separated one from the other.

- 3 Digital inputs
- 2 Relay outputs
- 1 Analogue input
- 1 Analogue output
- DC 20 V output
- Systembus

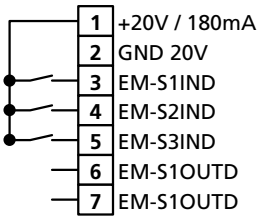

Terminal board X410A	Terminal	Function
	X410A.1	20 VDC power supply output (180 mA)
	X410A.2	20 V power supply GND
	X410A.3	EM-S1IND multifunction digital input V_{max} = 30 V (24 V/10 mA), PLC compatible
	X410A.4	EM-S2IND multifunction digital input V_{max} = 30 V (24 V/10 mA), PLC compatible
	X410A.5	EM-S3IND multifunction digital input V_{max} = 30 V (24 V/10 mA), PLC compatible
	X410A.6	EM-S1OUTD multifunction relay output, U_{max} = 24 V, 1 A (ohmic)
	X410A.7	

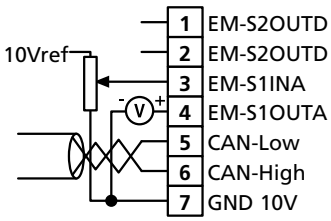

Terminal board X410B	Terminal	Function
	X410B.1	EM-S2OUTD multifunction relay output, U_{max} = 24 V, 1 A (ohmic)
	X410B.2	EM-S1INA +/- 10 V and +/- 20 mA analog input
	X410B.3	EM-S1OUTA +/- 10 V multifunction analog output
	X410B.4	CAN-Low Systembus
	X410B.5	CAN-High Systembus
	X410B.6	GND for +/- 10 V signals
	X410B.7	GND for +/- 10 V signals

Location of EM-IO-01 module on the frequency inverter

Input-output module / EM-IO-02

Like the previously illustrated EM-IO-01, the EM-IO-02 expansion module extends the standard inputs and outputs featured on ACT frequency inverters.
The EM-IO-02 module has a slightly modified layout compared to the -01 version, featuring an input for a PTC thermal probe in place of one of the module relay outputs.
The functions of all the other terminals are identical to the version illustrated above.

- 3 Digital inputs
- 1 Relay outputs
- 1 Analog input
- 1 Analog output
- DC 20 V output
- Motor PTC evaluation
- Systembus

Terminal board X410A	Terminal	Function
1 +20V / 180mA	X410A.1	20 V power supply output (180 mA)
2 GND 20V	X410A.2	20 V power supply GND
3 EM-S1IND	X410A.3	EM-S1IND multifunction digital input V_{max} = 30 V (24 V/10 mA), PLC compatible
4 EM-S2IND	X410A.4	EM-S2IND multifunction digital input V_{max} = 30 V (24 V/10 mA), PLC compatible
5 EM-S3IND	X410A.5	EM-S3IND multifunction digital input V_{max} = 30 V (24 V/10 mA), PLC compatible
6 EM-S1OUTD	X410A.6	EM-S1OUTD multifunction relay output, U_{max} = 24 V, 1 A (ohmic)
7 EM-S1OUTD	X410A.7	

Terminal board X410B	Terminal	Function
PTC, θ, 10Vref, V	X410B.1	Input for motor PTC
1 PTC	X410B.2	GND for motor PTC
2 GND-PTC	X410B.3	EM-S1INA +/- 10 V and +/- 20 mA analog input
3 EM-S1INA	X410B.4	EM-S1OUTA +/- 10 V multifunction analog output
4 EM-S1OUTA	X410B.5	CAN-Low Systembus
5 CAN-Low	X410B.6	CAN-High Systembus
6 CAN-High	X410B.7	GND for +/- 10 V signals
7 GND 10V		

Location of EM-IO-02 module on the frequency inverter

Input-output module / EM-IO-03

The EM-IO-03 expansion module is another variant for the extension of I/O facilities of ACTIVE frequency inverters.

- 2 Digital inputs
- 1 Relay outputs
- 1 Analog input
- 2 Analog output
- DC 20 V output
- Motor PTC evaluation
- Systembus

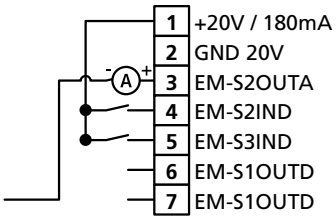

Terminal board X410A	Terminal	Function
	X410A.1	20 V DC power supply output (180 mA)
	X410A.2	20 V power supply GND
	X410A.3	EM-S2OUTA multifunction analog output 0-20 V / 4-20 mA
	X410A.4	EM-S2IND multifunction digital input V_{max} = 30 V (24 V/10 mA), PLC compatible
	X410A.5	EM-S3IND multifunction digital input V_{max} = 30 V (24 V/10mA), PLC compatible
	X410A.6	EM-S1OUTD multifunction relay output, U_{max} = 24 V, 1 A (ohmic)
	X410A.7	

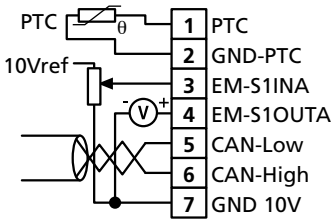

Terminal board X410B	Terminal	Function
	X410B.1	Input for motor PTC
	X410B.2	GND for motor PTC
	X410B.3	EM-S1INA +/- 10 V and +/- 20 mA analog input
	X410B.4	EM-S1OUTA +/- 10 V multifunction analog output
	X410B.5	CAN-Low Systembus
	X410B.6	CAN-High Systembus
	X410B.7	GND

Location of EM-IO-03 module on the frequency inverter

Input-output module / EM-IO-04

The EM-IO-04 expansion module is another variant for the extension of I/O facilities of ACTIVE frequency inverters.

- 2 Digital inputs
- 1 Digital Port (input or output)
- DC 20 V output
- Motor PTC or KTY evaluation
- Systembus

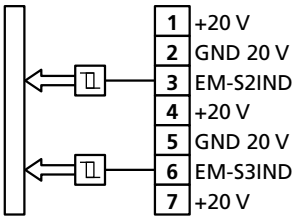

Terminal board X410A	Terminal	Function
	X410A.1	Voltage output 20 V
	X410A.2	Earth / GND 20 V
	X410A.3	Digital input EM-S2IND
	X410A.4	Voltage output 20 V
	X410A.5	Earth / GND 20 V
	X410A.6	Digital input EM-S3IND
	X410A.7	Voltage output 20 V

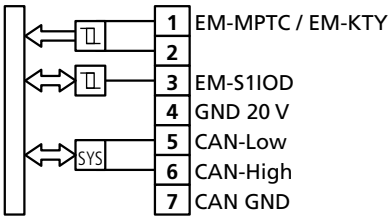

Terminal board X410B	Terminal	Function
	X410B.1	Motor PTC thermistor connection EM-MPTC or connection motor temperature sensor EM-KTY
	X410B.2	
	X410B.3	Digital Port EM-S1IOD / Digital input or digital output
	X410B.4	Earth / GND 20 V
	X410B.5	CAN-Low Systembus
	X410B.6	CAN-High Systembus
	X410B.7	Earth / GND

Location of EM-IO-04 module on the frequency inverter

Speed sensor module / EM-ENC-01

The EM-ENC-01 expansion module extends the number of speed sensor inputs with respect to the standard terminal board of the frequency inverter, and also increases the number of configurable pulse outputs.
This module is able to manage TTL and HTL incremental speed sensors to standard EIA RS422 (line driver) with 5-volt logic. The EM-ENC-01 speed sensor module is equipped with connection terminals for signals A, $\bar{A}$, B and $\bar{B}$ of the line driver speed sensor and terminals for repetition output of the same signals (speed sensor emulation). This makes it possible to create master-slave configurations between several separate units using the output signals of one unit as the input signals of the next.
The DC +/- 10 V analog input can be used for the inverter frequency reference signal.
The same terminal board also provides a DC + 5 V (200 mA) power supply for the line driver speed sensor.
Like the other EM expansion modules, the EM-ENC-01 features a Systembus interface.

- TTL or HTL encoder evaluation (without Zero-Pulse)
- DC +5 V encoder supply
- Analog output
- Frequency repetition output

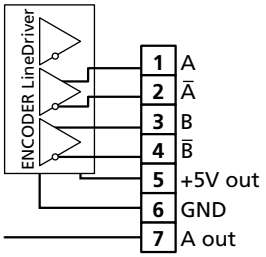

Terminal board X410A	Terminal	Function
	X410A.1	Channel A speed sensor input
	X410A.2	Channel $\bar{A}$ speed sensor input
	X410A.3	Channel B speed sensor input
	X410A.4	Channel $\bar{B}$ speed sensor input
	X410A.5	+ 5 V (200 mA) power supply output
	X410A.6	5 V power supply GND
	X410A.7	Speed sensor channel A repetition output

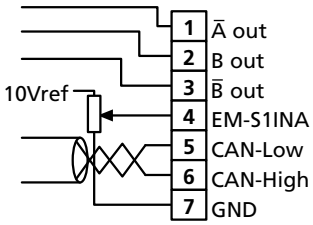

Terminal board X410B	Terminal	Function
	X410B.1	Channel $\bar{A}$ speed sensor repetition output
	X410B.2	Channel B speed sensor repetition output
	X410B.3	Channel $\bar{B}$ speed sensor repetition output
	X410B.4	EM-S1INA +/- 10 V analog input
	X410B.5	CAN-Low Systembus
	X410B.6	CAN-High Systembus
	X410B.7	GND

Location of EM-ENC-01 module on the frequency inverter

Speed sensor module / EM-ENC-02

The EM-ENC-02 speed sensor module extends the standard terminal board of the inverter, providing an interface for line driver encoders with relative DC + 5 V power supply.
The same module is equipped also with a DC 0 ... 20 mA and +/- 20 mA analog input and a DC + 20 mA analog output, together with an input for a PTC thermal probe and a digital port configurable as an input or output.
Also this module is equipped with a Systembus port.

- TTL or HTL encoder evaluation (without Zero-Pulse)
- DC +5 V encoder supply
- 1 Digital Port (input or output)
- 1 Analog input
- 1 Analog output
- Motor PTC evaluation
- Systembus

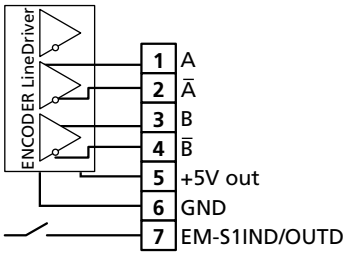

Terminal board X410A	Terminal	Function
	X410A.1	Channel A speed sensor input
	X410A.2	Channel Ā speed sensor input
	X410A.3	Channel B speed sensor input
	X410A.4	Channel B̄ speed sensor input
	X410A.5	+ 5 V (200 mA) power supply output
	X410A.6	5V power supply GND
	X410A.7	EM-S1IND/OUTD digital input/output

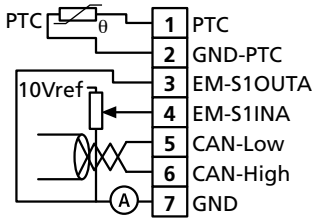

Terminal board X410B	Terminal	Function
	X410B.1	Input for motor PTC
	X410B.2	GND for motor PTC
	X410B.3	EM-S1OUTA 0 ... 20 mA analog output
	X410B.4	EM-S1INA +/- 10 V and +/- 20 mA analog input
	X410B.5	CAN-Low Systembus
	X410B.6	CAN-High Systembus
	X410B.7	GND

Location of EM-ENC-02 module on the frequency inverter

Speed sensor module / EM-ENC-03

The EM-ENC-03 extends the standard terminal board of the inverter, providing an interface for line driver speed sensors.
Also this module is equipped with a Systembus port.
Unlike the other EM-ENC-XX modules, the EM-ENC-03 module is not equipped with a power supply output for the speed sensor.

- TTL or HTL encoder evaluation (without Zero-Pulse)
- Systembus

Terminal board X410A	Terminal	Function
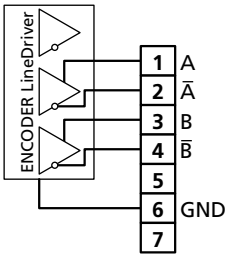	X410A.1	Channel A speed sensor input
	X410A.2	Channel Ā speed sensor input
	X410A.3	Channel B speed sensor input
	X410A.4	Channel B̄ speed sensor input
	X410A.5	-
	X410A.6	GND
	X410A.7	-

Terminal board X410B	Terminal	Function
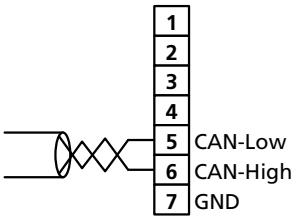	X410B.1	-
	X410B.2	-
	X410B.3	-
	X410B.4	-
	X410B.5	CAN-Low Systembus
	X410B.6	CAN-High Systembus
	X410B.7	GND

Location of EM-ENC-03 module on the frequency inverter

Speed sensor module / EM-ENC-04

The EM-ENC-04 speed sensor module extends the standard terminal board of the inverter, providing an interface for line driver speed sensors with Z channel.
This module is able to manage TTL, HTL, or push-pull incremental speed sensors to standard EIA RS422 (line driver). The EM-ENC-04 speed encoder module is equipped with 6 control terminals for A, $\bar{A}$, B, $\bar{B}$ direction signals and Z and $\bar{Z}$ zero signals transmitted by the speed sensor.
The same module also features a ± 10 V and ± 20 mA analog input and a ± 10 V voltage output in addition to a digital relay output.
The module also features two output voltages (+ 5 V and + 24 V) for the speed sensor power supply.

- TTL or HTL encoder evaluation (with Zero-Pulse)
- DC +5 V encoder supply
- DC +20 V encoder and external supply
- 1 Relay output
- 1 Analog input
- 1 Analog output

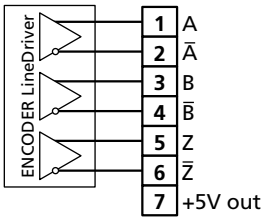

Terminal board X410A	Terminal	Function
	X410A.1	Channel A speed sensor input
	X410A.2	Channel $\bar{A}$ speed sensor input
	X410A.3	Channel B speed sensor input
	X410A.4	Channel $\bar{B}$ speed sensor input
	X410A.5	Channel Z speed sensor input
	X410A.6	Channel $\bar{Z}$ speed sensor input
	X410A.7	+ 5 V power supply output (200mA)

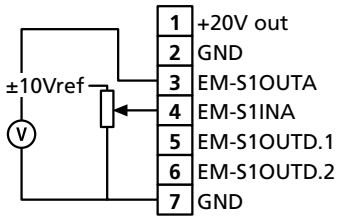

Terminal board X410B	Terminal	Function
	X410B.1	+ 20 V power supply output (180 mA)
	X410B.2	Power supply GND
	X410B.3	± 10 V analog output
	X410B.4	± 10 V analog input
	X410B.5	EM-S1OUTD multifunction relay output, U_{max} = 24 V, 1 A (ohmic)
	X410B.6	
	X410B.7	GND

Location of EM-ENC-04 module on the frequency inverter

Speed sensor module / EM-ENC-05

The EM-ENC-05 speed sensor module extends the standard terminal board of the inverter, providing an interface for line driver speed sensors with Z channel.
This module is able to manage TTL, HTL, or push-pull incremental speed sensors to standard EIA RS422 (line driver). The EM-ENC05 speed encoder module is equipped with 6 control terminals for A, $\bar{A}$, B, $\bar{B}$, direction signals and Z and $\bar{Z}$ zero signals transmitted by the speed sensor.
The same module also features a ± 10 V and ± 20 mA analog input and a ± 10 V voltage output in addition to a digital relay output.
It is also equipped with a SYSTEMBUS communication bus.

- TTL or HTL encoder evaluation (with Zero-Pulse)
- DC +5 V encoder supply
- DC +20 V encoder and external supply
- 1 Analog input
- 1 Analog output

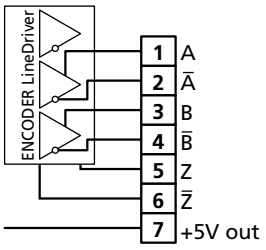

Terminal board X410A	Terminal	Function
	X410A.1	Channel A speed sensor input
	X410A.2	Channel $\bar{A}$ speed sensor input
	X410A.3	Channel B speed sensor input
	X410A.4	Channel $\bar{B}$ speed sensor input
	X410A.5	Channel Z speed sensor input
	X410A.6	Channel $\bar{Z}$ speed sensor input
	X410A.7	+ 5 V power supply output (200mA)

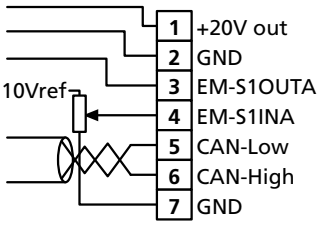

Terminal board X410B	Terminal	Function
	X410B.1	+ 20 V power supply output (180 mA)
	X410B.2	Power supply GND
	X410B.3	EM-S1OUTATA 0 ... 20 mA analog output
	X410B.4	EM-S1INA +/- 10 V and +/- 20 mA analog input
	X410B.5	CAN-Low Systembus
	X410B.6	CAN-High Systembus
	X410B.7	GND

Location of EM-ENC-05 module on the frequency inverter

Resolver Module / EM-RES-01

The EM-RES-01 angular position transducer module extends the standard functions of the frequency inverter by providing a supplementary input for a resolver (electromechanical absolute speed sensor).
Resolver gives the instantaneous motor shaft position value even at standstill, and its angular position within a revolution.
EM-RES-01 provides 6 terminals for connection of the two sinØ and cosØ track signals generated by the transducer and also carry the resolver power supply voltage.
The module EM-RES-01 also supplies an output signal emulating a digital incremental speed sensor through the generation of squarewave signals A, $\bar{A}$, B, $\bar{B}$, which can be used for shaft synchronisation of any connected slave inverters.
The EM-S1INA multifunction analog input (± 10 V or ± 20 mA) and a Systembus communication port extend the standard functions of the ACT frequency inverter.

- Resolver evaluation
- Frequency repetition output without Zero-Pulse
- Analog input
- Systembus

Terminal board X410A	Terminal	Function
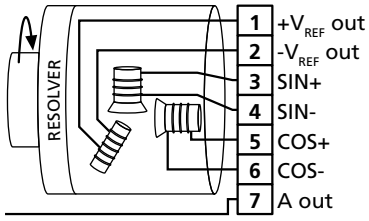	X410A.1	(+) ~6 VAC resolver power supply (-) (I_{max} = 60mA)
	X410A.2	
	X410A.3	Resolver sinθ signal input
	X410A.4	
	X410A.5	Resolver cosθ signal input
	X410A.6	
	X410A.7	Channel A speed sensor emulation

Terminal board X410B	Terminal	Function
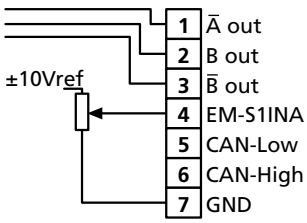	X410B.1	Channel $\bar{A}$ speed sensor emulation
	X410B.2	Channel B speed sensor emulation
	X410B.3	Channel $\bar{B}$ speed sensor emulation
	X410B.4	± 10 V or ± 20 mA analog input
	X410B.5	CAN-Low Systembus
	X410B.6	CAN-High Systembus
	X410B.7	GND

Location of EM-RES-01 module on the frequency inverter

Resolver Module / EM-RES-02

EM-RES-02 angular position transducer module extends the standard functions of the frequency inverter by providing a supplementary input for a resolver.
This module shares all the features of EM-RES-01 except for the emulation of the encoder zero signal, which in this case replaces the Systembus port.

- Resolver evaluation
- Frequency repetition output with Zero-Pulse
- Analog input

Terminal board X410A	Terminal	Function
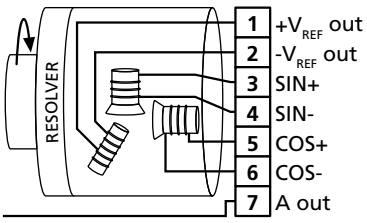	X410A.1	(+) ~6 VAC resolver power supply (-) (I_{max} = 60mA)
	X410A.2	
	X410A.3	Resolver senθ signal input
	X410A.4	
	X410A.5	Resolver cosθ signal input
	X410A.6	
	X410A.7	Channel A speed sensor emulation

Terminal board X410B	Terminal	Function
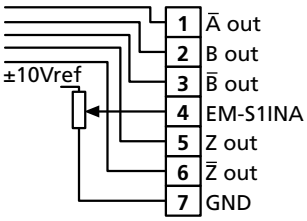	X410B.1	Channel Ā speed sensor emulation
	X410B.2	Channel B speed sensor emulation
	X410B.3	Channel B̄ speed sensor emulation
	X410B.4	±10 V or ± 20 mA analog input
	X410B.5	Channel Z speed sensor emulation
	X410B.6	Channel Z̄ speed sensor emulation
	X410B.7	GND

Location of EM-RES-02 module on the frequency inverter

Engineering software

VPlus for PC

VPlus is a software application for management of Bonfiglioli ACTIVE and VCB inverters using a PC connected to the drive by means of an RS232 or RS485 serial interface.
For this purposes the ACTIVE inverter must be equipped with the optional KP232 interface or with communication module CM232 or CM485.
The program is a highly useful accessory in all phases of the application, from inverter commissioning to run-time monitoring.
The user interface features an ergonomic structure that supports the user during programming, management, and monitoring, allowing storage of data sets by saving them to file and subsequent retrieval for the reverse procedure of downloading to the inverter.
VPlus requires a PC running Windows 98/NT/2000/XP and an RS232 or RS485 standard serial port with DB9 connector, grounded to avoid problems of disturbance on signals exchanged between inverter and computer.
The menus / submenus structure provides subdivision of parameters by uniform groups.
The interface language can be English, Italian, or German.
The VPlus program also provides the facility for modem connection for remote diagnostics operations on the inverter.

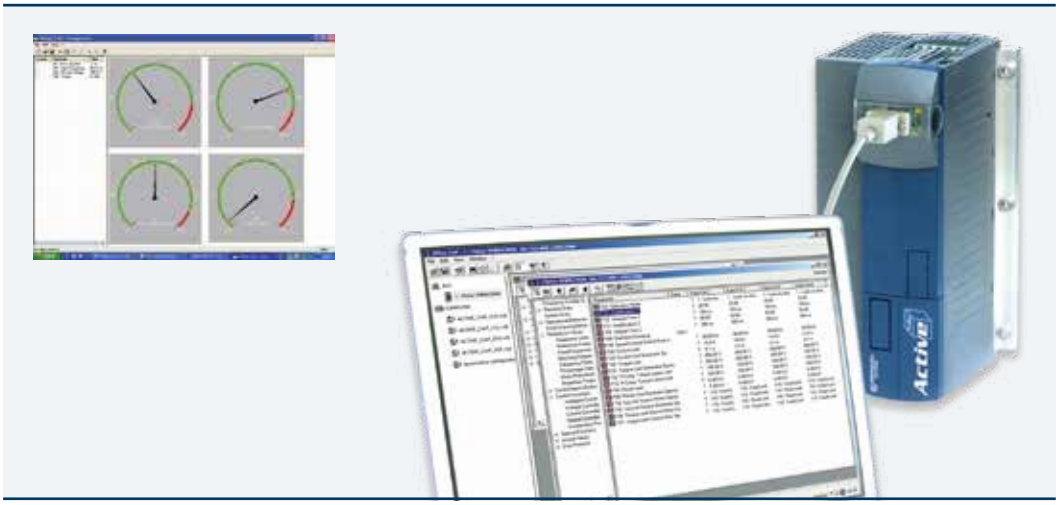

OSCILLOSCOPE function

The Oscilloscope Function of the ACTIVE inverter is an application package integrated in the Bonfiglioli VPlus program which, by means of the acquisition of signals arriving from the drive core, enables the graphic representation of both the power and control waveforms for the purposes of field technical diagnosis optimisation of the applications.
An essential requirement for the use of the integrated oscilloscope is the installation of interface module KP232 on the inverter. When connected to the PC using a standard DB9 female-female cable this interface creates 115 kbit/s acquisition channels of the four traces shown on the computer screen.

Salient features of the Oscilloscope Function:
- 4 channels
- Display of absolute values
- Amplitude and time measurement cursors
- Timebase from 20 ms/div to 50 s/div
- Various trigger types
- Graphic memory up to 1 Mbyte
- Trace recording memory up to 60 min.
- Sampling times from 2 ms to 32 ms (depending on the PC)
- Various trace storage formats

Minimum inverter requirements:
- ACTIVE with firmware version 4.1.X or higher
- KP232 interface ver. 0204 or more recent

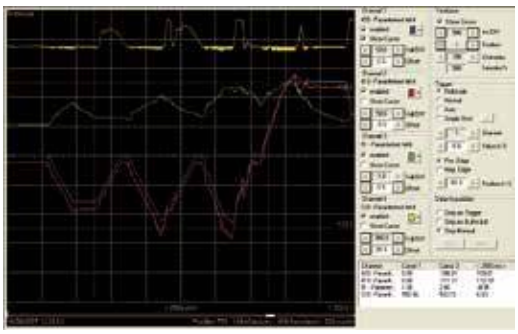

ACTIVE oscilloscope graphic presentation
The functionality and practicality of the virtual oscilloscope are identical to those of a powerful and modern conventional oscilloscope, with the added benefit that all the parameters controlled by the inverter microprocessor can be displayed, whether of a physical nature (current, voltage, frequency, etc.) or a virtual nature (internal control variables, timer signals, comparator signals, internal digital signals, etc.).

Configurations implementable with the ACT frequency inverter (parameter P030)

110: Simple Sensorless Control
111: Simple Sensorless Control with PI function
115: Simple Sensorless Control with master / slave control
116: Simple Sensorless Control with synchronisation control
160: Simple Sensorless Control with Brake Control and Load Detection
210: Field-oriented control with speed sensor
211: Field-oriented control with speed sensor and PI function
215: Field-oriented control with speed sensor with master / slave function
216: Field-oriented control with speed sensor with electric shaft
230: Field-oriented control with speed sensor with torque/speed switching
260: Field-oriented control with speed sensor with Brake Control and Load Detection
410: Sensorless Control with extended tuning
411: Sensorless field orientation control with PI regulator
415: Sensorless field orientation control with electronic gearbox and position control
430: Sensorless Control with extended tuning and torque / speed control switching
460: Sensorless Control with extended tuning and with Brake Control and Load Detection
510: Sensorless field orientation control of a synchronous machine
515: Sensorless field orientation control of a synchronous machine with electronic gear and position control
516: Sensorless field orientation control of a synchronous machine with electronic gear and index control
530: Sensorless field orientation control of a synchronous machine with torque/speed switching
560: Sensorless field orientation control of a synchronous machine with electronic gear and position control

By default the ACT frequency inverter is supplied with configuration 110.
Configurations can be changed from the control unit or PC (VPlus) by means of parameter P030.
Configuration 110 is recommended for low dynamic applications or for speed control of several motors in parallel (in the event that the inverter selection criterion is based on the sum of the rated currents of the motors to be driven).
Configuration 111 is recommended for driving turbine machinery (pumps and fans).

Configuration 410 provides high dynamic performance also at low speed without the use of a speed sensor. For enhanced performance the motor data must be entered and the system must be tuned; in addition, the speed controller must be set up for the optimisation of dynamic performance in accordance with the moment of inertia of the load.
This configuration can also be used for simple resolvers by implementing the internal function for positioning from an external reference point (e.g. proximity switch).
Configuration 460 is particularly suitable for elevators and lifting drives in general (cranes, travelling hoists, etc.).
Configuration 210 requires the use of a speed sensor (push-pull or line driver); this configuration allows the most precise load control in terms of speed and torque, including control with nominal torque at zero rpm (standstill with torque).
Configuration 216 can be utilised for synchronous tie applications between several motors with definition of angular phase differences between each axis.

Configuration 510 is the standard synchronous motor operation. This configuration needs a synchronous motor with Resolver and an ACT device with EM-RES.
Configuration 515 adds the functionality of the electronic gear to the configuration 510.
Configuration 516 allows synchronous tied applications with an index control.
Configuration 560 adds extended brake control and is suited especially for vertical movements.

Functions implemented in standard firmware

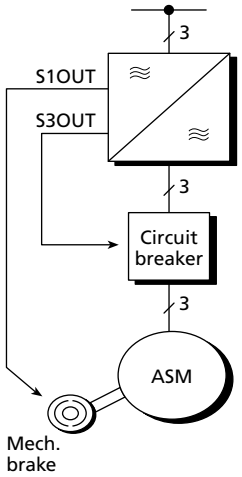

Parking brake control (X60 configurations)
Many drives, particularly in the mechanical engineering industry, require a holding brake that maintains the position that has been reached even in the event of power losses. An extended system is available for holding brake control for lifting drives. In addition to holding brake control, this includes also control of the circuit breaker between motor and inverter in certain cases (e.g. elevators).
To compensate for the response time of mechanical components, parameterisation of switching times can be executed with timers. This solution makes it possible to optimise starting and stopping behaviour in the case of suspended loads.

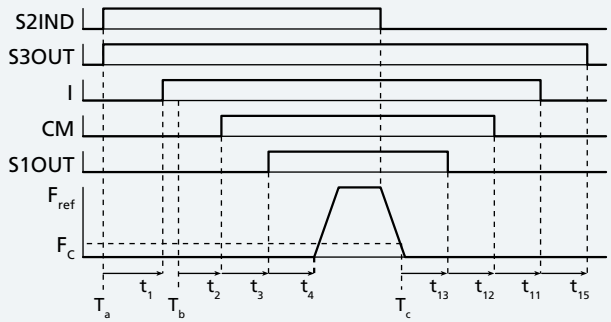

Motor brake (motor chopper) parameter P507
The Motor Chopper function (P507) allows efficient braking of drives with high flywheel loads without requiring external components such as brake units or mains recovery devices.

Positioning (parameters from P458 to P464)
With "Positioning from a reference point" (Parameters P458 to P464), users can position a drive starting from an external signal (e.g. proximity switch). The reference point is acquired on the digital inputs and the target position can be parameterised. "Positioning from a reference point" can be employed independently of the control configuration (with/without speed sensor). Since it is possible to select drive behaviour once the target position has been reached, "Positioning from a reference point" is also suitable for fully automatic drive systems.

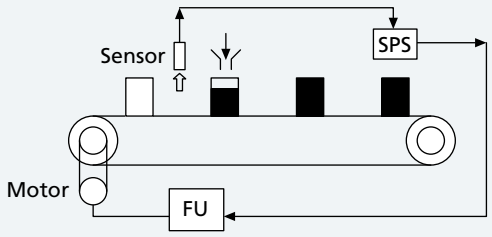

Timer Functions (parameters P790 to P795)
The system is equipped with two timers which are connected, in the standard configuration, to a digital input and a digital output but which can be associated, by means of programming, with the I/Os and several internal functions.
Delay times can be programmed in a range from 10 ms up to 650 hours. Multiple operating modes permit the adaptation of the Timer function to meet the requirements of a broad range of applications.

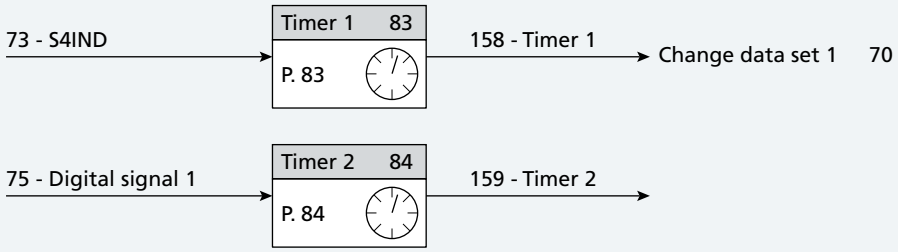

ACT Systembus

The ACT frequency inverter systembus is an economical and powerful communication system allowing the connection of up to 64 ACT inverters. Taking account of its characteristics, the systembus is based on CAN and is implemented along the lines of CANopen methods. The systembus has two SDO channels and three PDO channels.

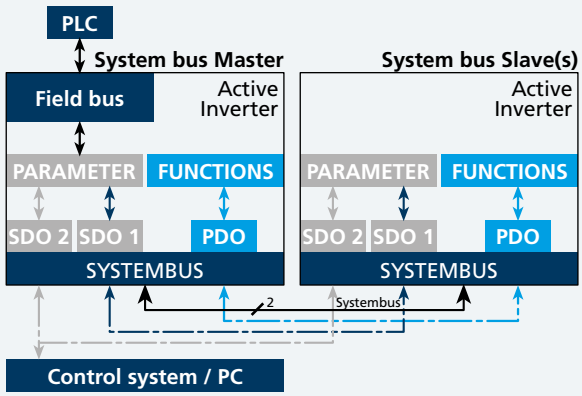

Channel SDO1 allows access to the real parameters and values of all the inverters in the systembus from an external control system (e.g. PLC, NC, etc.). For this reason the master inverter must be interfaced with the field bus. Channel SDO2 is used for connection of a PC display tool for Windows. This display tool allows parameterisation and monitoring of the process on-line.

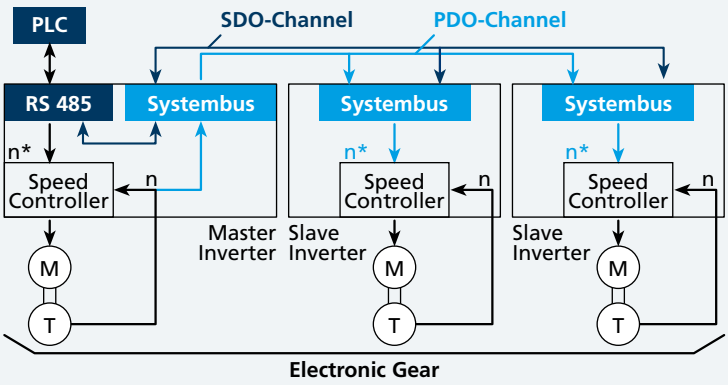

Data can be exchanged between inverters with very high speed and precision by means of the PDO channels. Data exchange can take place between any of the inverters in the systembus.
In the case of a master/slave control, nominal speed is transmitted from the master inverter to the slaves. This strategy makes it possible to obtain an adjustable speed ratio between the master and one or more slaves. In the case that speed sensors are used on the master and on the slaves, it is possible to implement a synchronous tie with angular ratios that can be modified on-line.

Master/slave synchronisation (X16 configurations)

Synchronisation of handling processes (e.g. conveyor belts) is one of the functions available with the standard firmware.

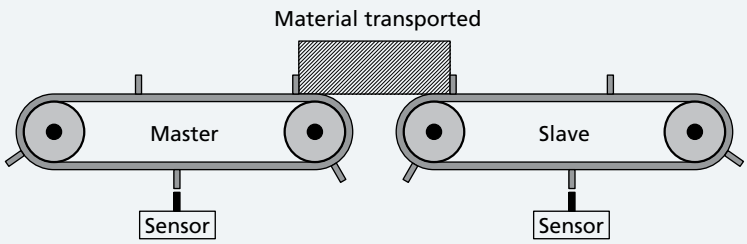

There are several dedicated inputs for synchronisation signals (electronic gear). For master-slave control it is possible to set angular ratios with very high resolution. An offset can be programmed between two conveyor belts. The synchronism regulator can be activated/ deactivated by means of a programmable digital input, e.g. for alignment procedures.
For functional control the current deviation between master and slave can be monitored. If a programmable threshold value is exceeded an error signal can be generated by means of a freely configurable digital output.

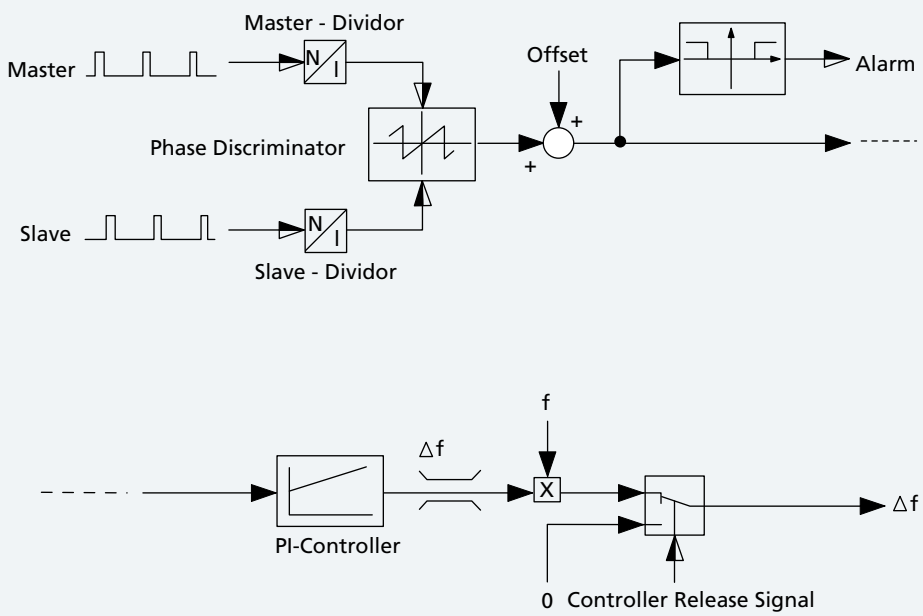

Mounting

A wide range of mechanical accessories is available for ACT Series frequency converters, to make installation extremely easy in all sorts of application.
In standard mountings the unit can be installed directly on the mounting plate or through-the-wall. A vibration-proof mounting variant and a standard DIN bar mounting variant are also available.
The range of mounting variants also includes an optional support with shielded brackets, so that the right solution for all possible needs can always be found.
Installations are practically identical for all sizes, so the examples shown below can be taken as representative solutions and ideal for all installers seeking a mechanically simple, compact installation solution.

Types of mounting kits

The drive is supplied complete with a standard installation kit for fixing to an electrical cabinet mounting panel.
3 different optional installation kits are available on request.

MPSV
Thru-type assembly for higher protection classes or enhanced cooling characteristics

MNVIB
Anti-vibration mounting for installations on machines that generate significant vibrational stress

MDIN
DIN rail assembly for fast and modular installation / coupling

Size 1

Inverter Bonfiglioli	Mounting	Description
ACT 201-05 … ACT 201-09 ACT 401-05 … ACT 401-11	MPSV1	Thru-type assembly
	MNVIB1	Antivibration assembly
	MDIN1	DIN rail assembly

Standard assembly

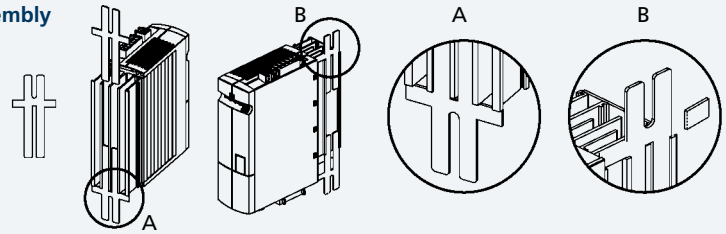

MPSV1

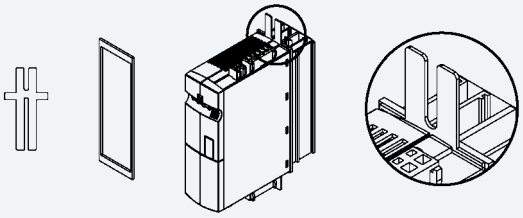

MNVIB1

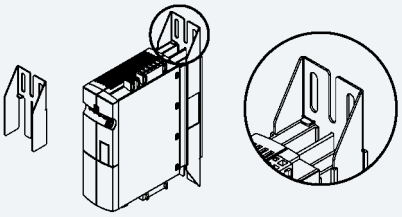

MDIN1

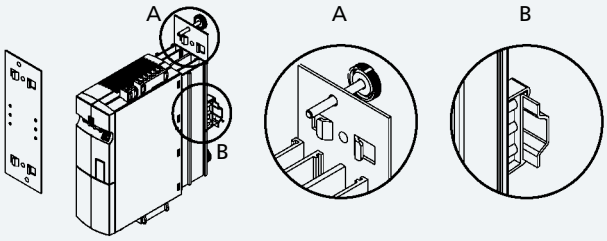

Size 2

Inverter Bonfiglioli	Mounting	Description
ACT 201-11 … ACT 201-15 ACT 401-12 … ACT 401-18	MPSV2	Thru-type assembly
	MNVIB2	Antivibration assembly
	MDIN2	DIN rail assembly

Standard assembly

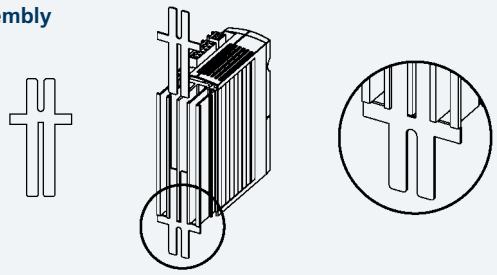

MPSV2

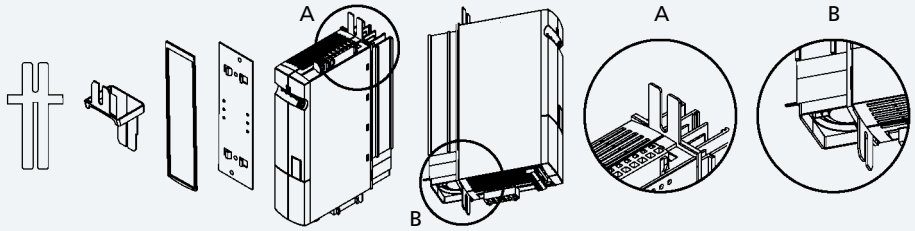

MNVIB2

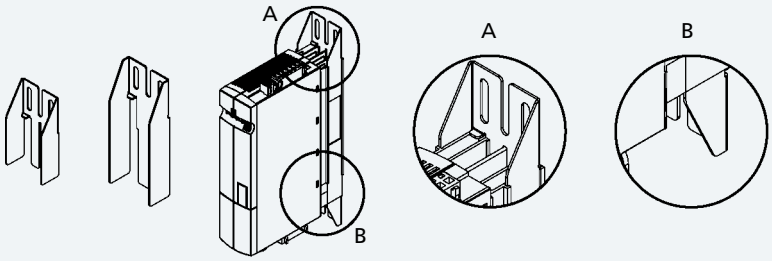

MDIN2

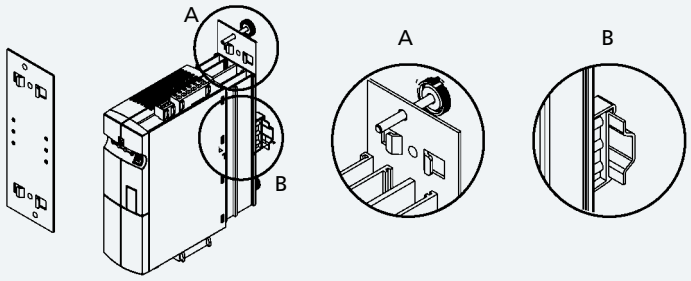

Size 3

Inverter Bonfiglioli	Mounting	Description
ACT 201-18 … ACT 201-19 ACT 401-19 … ACT 401-22	MPSV3	Thru-type assembly
	MNVIB3	Antivibration assembly

Standard assembly

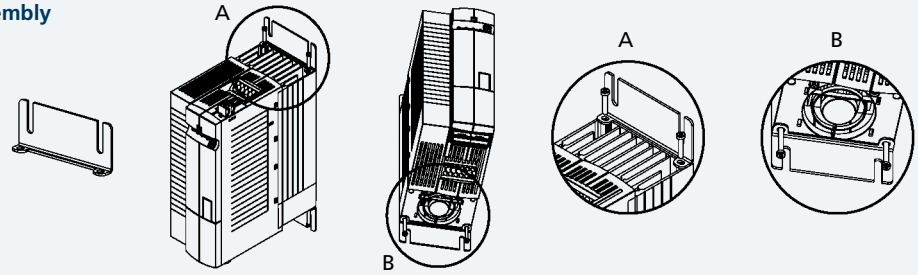

MPSV3

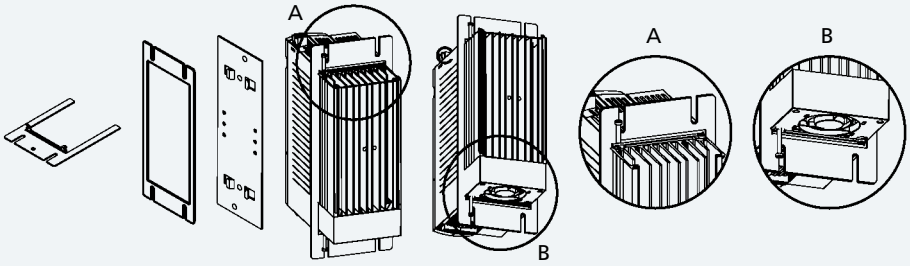

MNVIB3

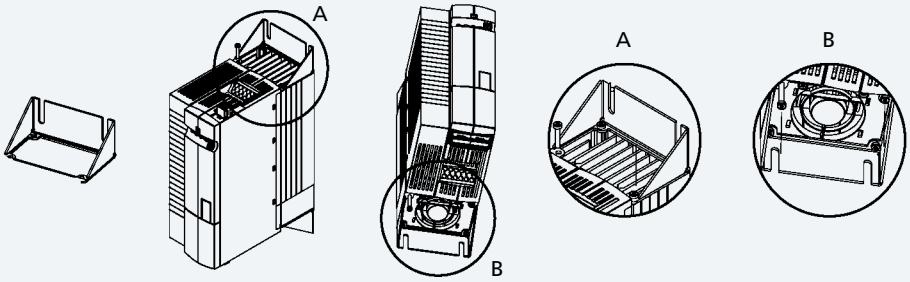

Size 4

Inverter Bonfiglioli	Mounting	Description
ACT 201-21 … ACT 201-22 ACT 401-23 … ACT 401-25	MPSV4	Thru-type assembly
	MNVIB4	Antivibration assembly

Standard assembly

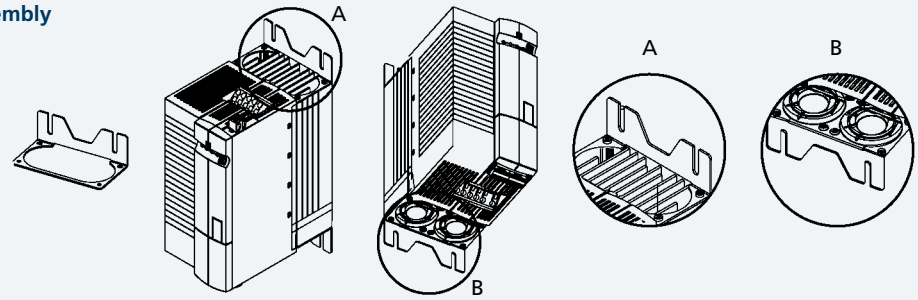

MPSV4

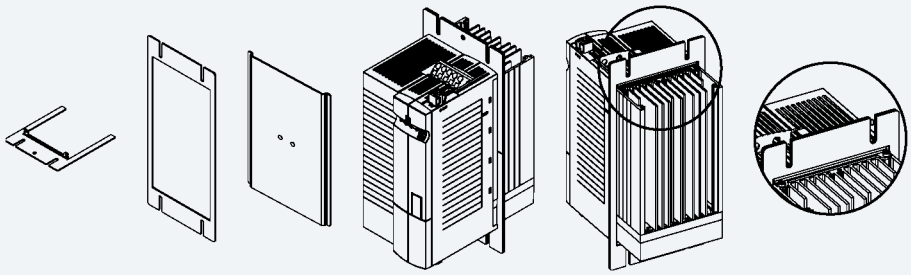

MNVIB4

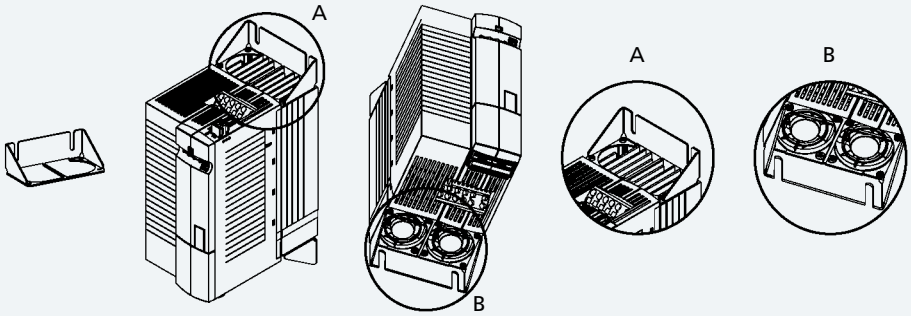

Size 5

Inverter Bonfiglioli	Mounting	Description
ACT 401-27 … ACT 401-31	MPSV5	Thru-type assembly
	MNVIB5	Antivibration assembly

Standard assembly

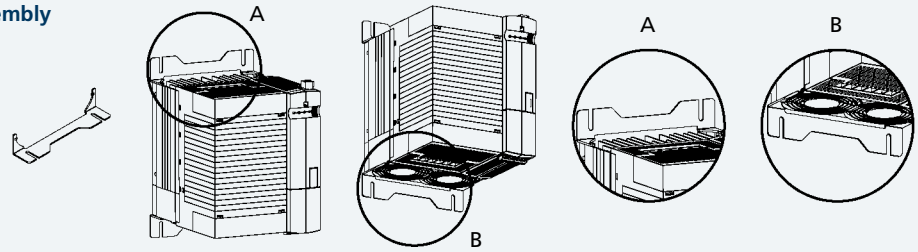

MPSV5

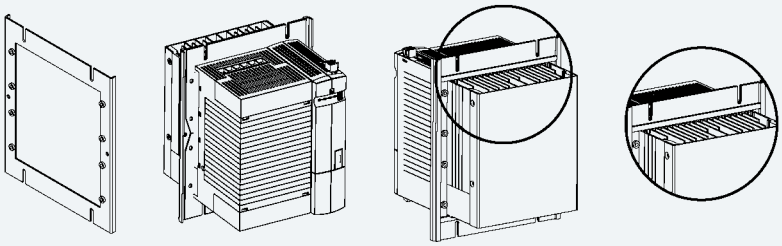

MNVIB5

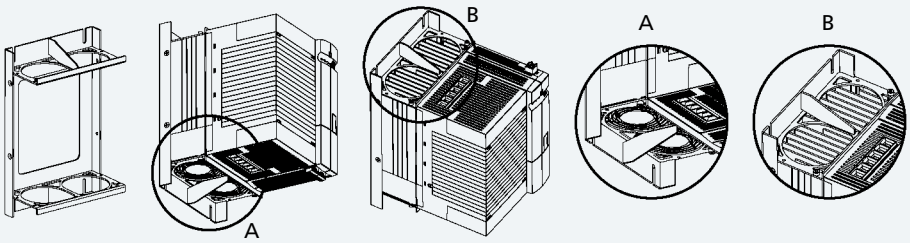

Size 6

Inverter Bonfiglioli	Mounting	Description
ACT 401-33 … ACT 401-39	MPSV6	Thru-type assembly
	MNVIB6	Antivibration assembly

Standard assembly

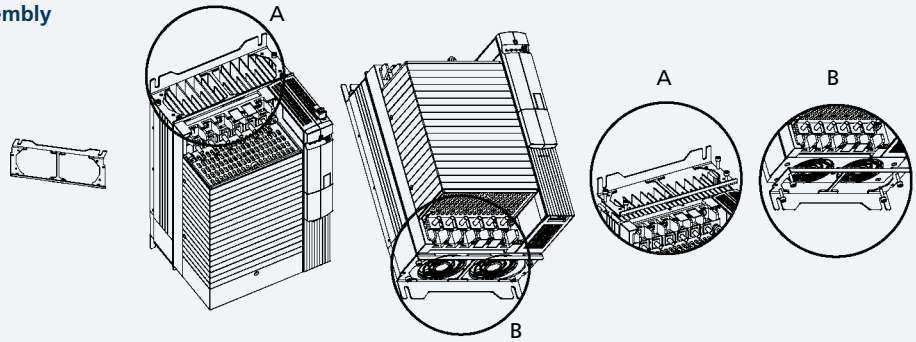

MPSV6

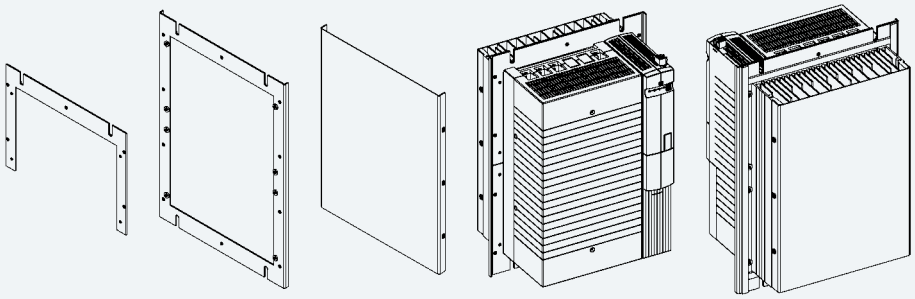

MNVIB6

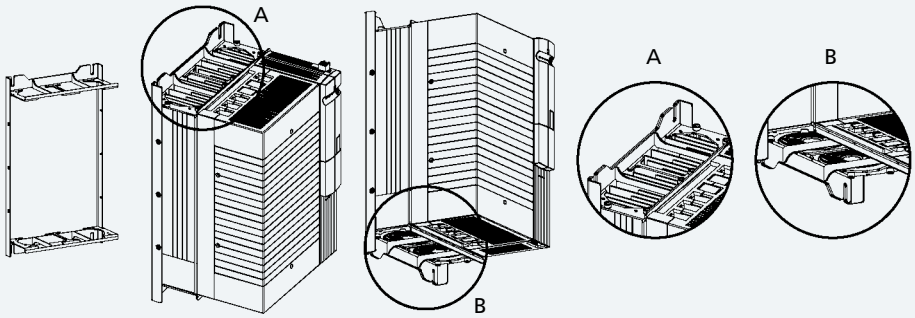

Size 7

Inverter Bonfiglioli	Mounting	Description
ACT 401-43 ... ACT 401-49	MPSV7	Thru-type assembly

Standard assembly

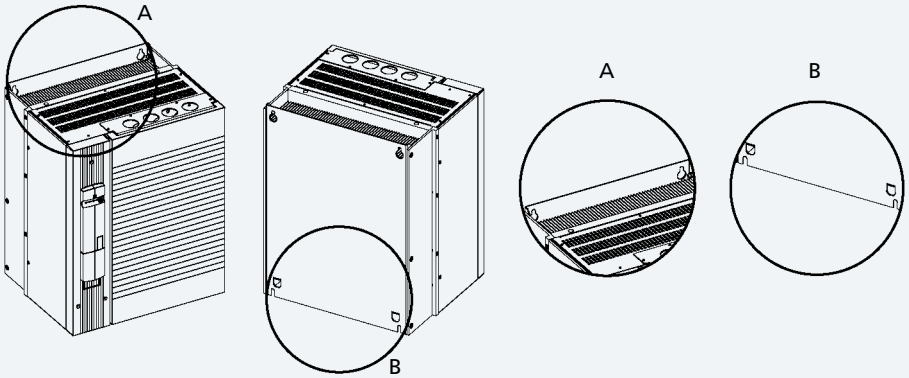

MPSV7

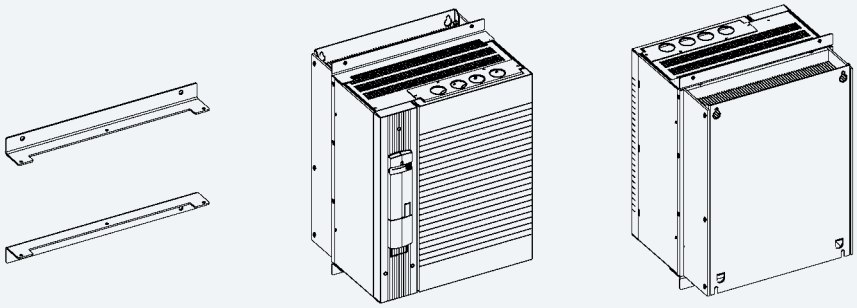

Input filter

Why an input filter?

An Input Filter is a filtration device to be installed up-line from the frequency inverter and down-line from the power feeding contactor.
The AC/DC rectifier at the inverter input generates harmonic disturbance on the absorbed current and returns disturbance generated by switching components towards the mains.
This harmonic current causes voltage distortions on the mains resulting in electromagnetic interference phenomena.
This harmonic distortion is reduced by means of line chokes, while disturbance is countered with EMI filters (attenuation of EMI voltages) such as those described below.
The use of input filters reduces the inverter input voltage. If required, these filters should be installed up-line from the inverter in the following order:

1. Mains supply
2. Line choke
3. EMI filter
4. Inverter

Line choke

- Line chokes are not mandatory: their use depends on the system engineer's need to reduce harmonic distortion in the short circuit point, and the need to reinforce the action of the EMI filter. A line choke is normally used if the mains short circuit power is lower than 1%.
- A line choke is recommended for the ACU201 and ACU401 frequency inverter series in the presence of high continuous input current required by the application, in order to increase the lifetime of the electrolytic capacitors.
- A line choke is always required in single and two-phase operation of the ACU201 frequency inverters.

EMI filter

- An EMI filter can be used in order to achieve Class "A" (groups 1, 2) or Class "B" interference suppression
- The EMI filter is available in a low leakage current version for special applications.
- The EMI - filter is part of the standard outfit in sizes of up to 4.0 kW and it is supplied as an optional for higher sizes in an internal (up to 7.5 kW) or external (above 7.5 kW) version.

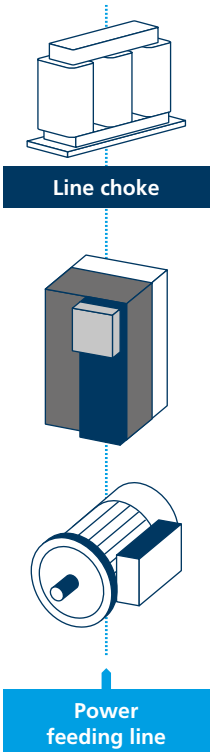

ACTIVE inverter - Line choke / EMI filter combination

	Compliance with Class A (Group 2)		Compliance with Class A (Group 1)		Compliance with Class B	
Mains Cable Length	**< 10 m**	**< max***	**< 10 m**	**< max***	**< 10 m**	**< max***
ACT 1 (standard internal filter)	Standard	external choke	external choke	external filter	external choke	external filter
ACT 2 (standard internal filter)	Standard	external choke	external choke	external filter	external choke	external filter
ACT 3	internal filter or external choke	internal filter or external choke	internal filter + external choke	internal filter + external choke	internal filter + external choke	external filter
ACT 4	external choke	external filter	external filter	external filter	external filter	external filter + external choke
ACT 5	external choke	external choke	external filter	external filter	external filter	external filter + external choke
ACT 6	external choke	external choke	external filter	external filter	external filter	external filter
ACT 7	external choke	external choke	external filter	external filter	—	—

** See the operation manual*

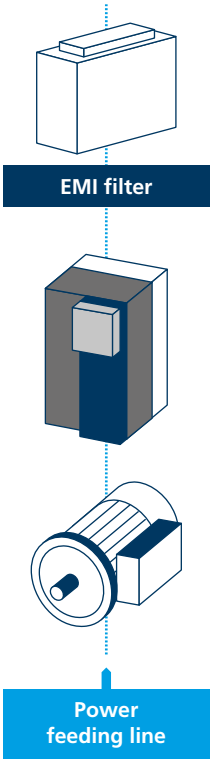

Line choke

The simplest way of reducing high harmonic components and hence reactive power is connecting a choke in series on the mains side of the inverter. Depending on the system, reactive power consumption can be reduced by approximately 20% of the figure without line choke.
The line choke increases inductance towards the mains. Mains feed line choke can be regarded as sufficient if short-circuit power is from 20 to 40 times higher than the inverter nominal output.
The inverter is suitable for connection to public or industrial mains supplies in compliance with technical data. If the supply mains transformer output is ≤ 500 kVA, the optional mains choke is needed only if specified in the inverter technical data. The other inverters are suitable for the connection to the mains without a mains choke with relative impedance ≥ 1%. If it is desired to connect more than one inverter, use the sum of the nominal outputs as a basis.
Since experience has shown that the nominal short circuit power on the inverter connection point is often unknown, BONFIGLIOLI recommends the use of mains chokes with 4% voltage drop.

The relative short circuit voltage equivalent to a 4% voltage drop represents the percentage of the nominal voltage at which a current equal to rated current flows in the case of a short circuit.
The European reference standard for harmonics is EN 60 555, while in the US and Canada systems must comply with standard IEEE 519 and various generic national regulations.

The line choke must be installed between the mains connection point and the EMI filter. Both the line choke and inverter should be installed on a common metal baseplate and each should be connected to the metal mounting plate and earthed by means of a large contact area copper braid.

Technical data

Nominal voltages
230V +/- 10%
400V +/- 10%

Frequencies
50/60 Hz
uk (a IN / 50 Hz) 4%

Insulating material class
T40/F

Ambient temperature
40°C

Protection class
IP00 / VBG4

Connection type
Contact-protected terminals

Line choke

Dimensions

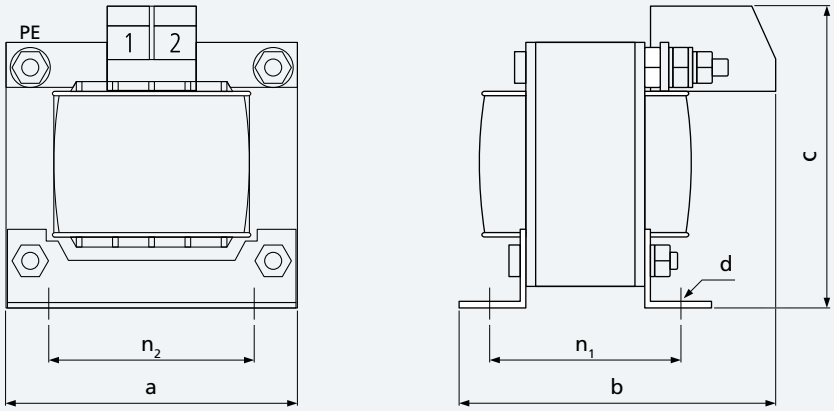

Technical data

Bonfiglioli frequency inverter - Line choke combination, **1x230V~**

Bonfiglioli inverter	Bonfiglioli choke	Nominal current	Power dissipation
		[A]	[W]
ACT 201-05	LCVS006	6	8.0
ACT 201-07	LCVS008	8	8.0
ACT 201-09	LCVS010	10	10.0
ACT 201-11	LCVS015	15	12.0
ACT 201-13	LCVS018	18	15.0

Technical assembly data

Bonfiglioli choke	Dimensions			Assembly			Weight	Connection terminal		
	a [mm]	b [mm]	c [mm]	n_2 [mm]	n_1 [mm]	d [mm]	[kg]	[mm]	[Nm]	PE
LCVS006	60	62	75	44	38	3.6	0.5	0.75-2.5	1.0-1.2	2.5 mm²
LCVS008	60	67	75	44	43	3.6	0.6	0.75-2.5	1.0-1.2	2.5 mm²
LCVS010	66	80	70	50	51	4.8	0.8	0.75-2.5	1.0-1.2	M4
LCVS015	78	78	80	56	49	4.8	1.1	0.75-4.0	1.5-1.8	M4
LCVS018	85	85	95	64	50	4.8	1.8	0.75-4.0	1.5-1.8	M4

Line choke

Dimensions

LCVT004 ... LCVT025

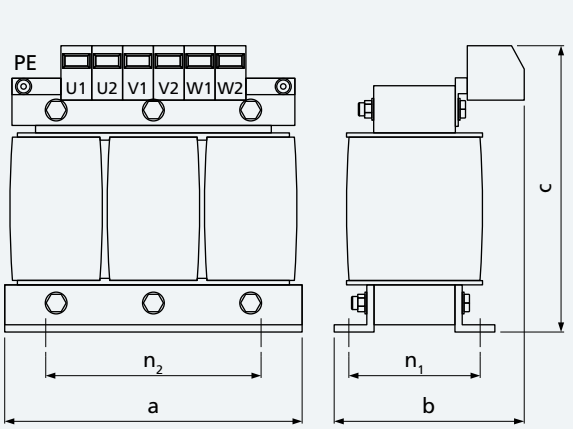

LCVT034 ... LCVT250

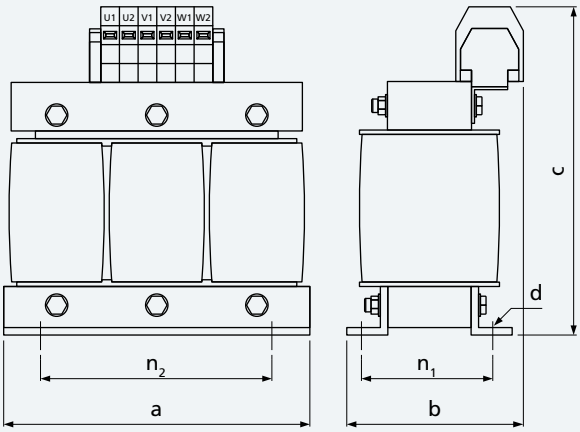

Technical data

Bonfiglioli frequency inverter – Line choke combination, **3x230V~**

Bonfiglioli inverter	Bonfiglioli choke	Nominal current	Choke	Power dissipation
		[A]	[mH]	[W]
ACT 201-05	LCVT004	4	7.32	20
ACT 201-07				
ACT 201-09	LCVT006	6	4.88	25
ACT 201-11	LCVT008	8	3.66	30
ACT 201-13	LCVT010	10	2.93	30
ACT 201-15	LCVT015	15	1.95	45
ACT 201-18	LCVT018	18	1.63	70
ACT 201-19	LCVT025	25	1.17	70
ACT 201-21	LCVT034	34	0.86	85
ACT 201-22				

Line choke

Technical data

Bonfiglioli frequency inverter – Line choke combination, **3x400V~**

Bonfiglioli inverter	Bonfiglioli choke	Nominal current	Choke	Power dissipation
		[A]	[mH]	[W]
ACT 401-05	LCVT004	4	7.32	20
ACT 401-07				
ACT 401-09				
ACT 401-11				
ACT 401-12				
ACT 401-13	LCVT006	6	4.88	25
ACT 401-15	LCVT008	8	3.66	30
ACT 401-18	LCVT010	10	2.93	30
ACT 401-19	LCVT015	15	1.95	45
ACT 401-21	LCVT018	18	1.63	70
ACT 401-22	LCVT025	25	1.17	70
ACT 401-23	LCVT025	25	0.86	85
ACT 401-25	LCVT034	34	0.86	85
ACT 401-27	LCVT050	50	0.59	100
ACT 401-29				
ACT 401-31	LCVT060	60	0.49	100
ACT 401-33	LCVT075	75	0.37	110
ACT 401-35	LCVT090	90	0.33	120
ACT 401-37	LCVT115	115	0.25	140
ACT 401-39	LCVT135	135	0.22	180
ACT 401-43	LCVT160	160	0.18	180
ACT 401-45	LCVT180	180	0.16	185
ACT 401-47	LCVT210	210	0.14	200
ACT 401-49	LCVT250	250	0.12	210

Technical assembly data

Bonfiglioli choke	Dimensions			Assembly			Weight	Connection terminal		
	a [mm]	b [mm]	c [mm]	n_2 [mm]	n_1 [mm]	d [mm]	[kg]	[mm]	[Nm]	PE
LCVT004	80	65	95	55	37	4	0,8	0.75-2.5	1.0-1.2	4 mm²
LCVT006	100	65	115	60	39	4	1,0	0.75-2.5	1.0-1.2	4 mm²
LCVT008	100	75	115	60	48	4	1,5	0.75-2.5	1.0-1.2	4 mm²
LCVT010	100	75	115	60	48	4	1,5	0.75-2.5	1.0-1.2	4 mm²
LCVT015	125	85	135	100	55	5	3,0	0.75-4.0	1.5-1.8	4 mm²
LCVT018	155	90	135	130	57	8	4,0	0.75-4.0	1.5-1.8	4 mm²
LCVT025	155	100	160	130	57	8	4,0	0.75-10	4.0-4.5	4 mm²
LCVT034	155	100	190	130	57	8	4,5	2.5-16	2.0-4.0	M5
LCVT050	155	115	190	130	72	8	4,5	2.5-16	2.0-4.0	M5
LCVT060	190	110	220	170	58	8	9,0	2.5-35	2.5-5.0	M5
LCVT075	190	120	250	170	68	8	12	25-50	3.0-6.0	M6
LCVT090	190	130	250	170	78	8	12	25-50	3.0-6.0	M6
LCVT115	210	140	270	180	82	8	14	25-50	3.0-6.0	M6
LCVT135	240	160	300	190	100	11	20	16-70	6.0-7.0	M8
LCVT160	240	160	310	190	100	11	20	50-95	6.0-12.0	M8
LCVT180	240	175	320	190	106	11	22	50-95	6.0-12.0	M8
LCVT210	240	200	335	190	121	11	26	95-150	10.0-20.0	M8
LCVT250	240	210	350	190	126	11	28	95-150	10.0-20.0	M8

EMI filters

Because of their intrinsic characteristics, all frequency inverters often generate undesired high frequency voltages generally referred to as "interference".
Mains filters are installed to reduce this interference.
Within the European Union reference standard EN EN61800-3 defines the thresholds for electromagnetic interference for different classes of equipment.
Active Series frequency inverters up to size 9.2 kW can be ordered with a built-in EMI filter conforming to the requirements of the standard for "class A – group 2" environments.
Two series of external interference filters are available for larger size Active frequency inverters and for installations where conformity to the stricter requirements of class B is necessary. The two series differ both in construction and power range.
The first set of filters are "backplate filters or foot print". They are available in sizes 7 to 40 A (suitable for Active frequency inverters up to size 4), and allow the frequency inverter to be installed on board the filter itself. The second series of filters are "book filters". They cover all other Active sizes up to 130 A and are designed for installation on the same mounting panel alongside the drive.
Mains filters with very low dispersion currents are available upon request for specific applications.

Basic circuit diagram

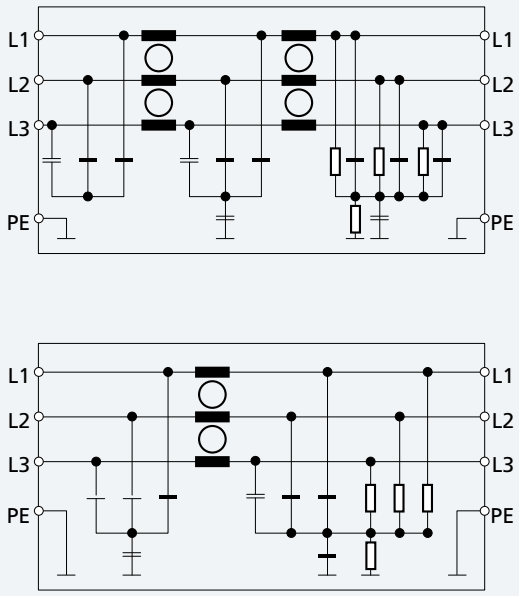

Backplate EMI filters

Mains voltage
3 x 480V~ maximum +10%

Nominal current
8A ... 40A

Frequency
50/60 Hz

Operating and storage temperature
-25 °C ... +100 °C (climate class acc. to CEI 25/100/21)

Ambient temperature
+40°C maximum

Protection class
IP00

Connection type
Contact-protected terminals
Strand connection on load side (only up to ACT 401-18)
Metal fasteners are included in the supply

Note
These mains filters are installed between the line choke and the frequency inverter. The frequency inverter installed on the EMI filter must be connected to the metal baseplate with a short, large section earth connection.
Overload capacity is 1.5 times rated current for 1 minute, every 30 minutes.

Bonfiglioli Inverter		Bonfiglioli EMI filter	Rated current	Leakage current	Power dissipation	Weight
Size	Type		[A]	[mA]	[W]	[kg]
1	ACT 201-05	FTV007B	8	5	10	1.5
	ACT 201-07					
	ACT 201-09					
	ACT 401-05					
	ACT 401-07					
	ACT 401-09					
	ACT 401-11					
2	ACT 201-11					
	ACT 401-12					
	ACT 401-13					
	ACT 401-15					
	ACT 401-18					
3	ACT 401-19	FTV018B	18	1.2	10	3.5
	ACT 401-21					
4	ACT 401-23	FTV040B	40	1.2	10	3.5
	ACT 401-25					

Backplate EMI filters

Dimensions FTV007B

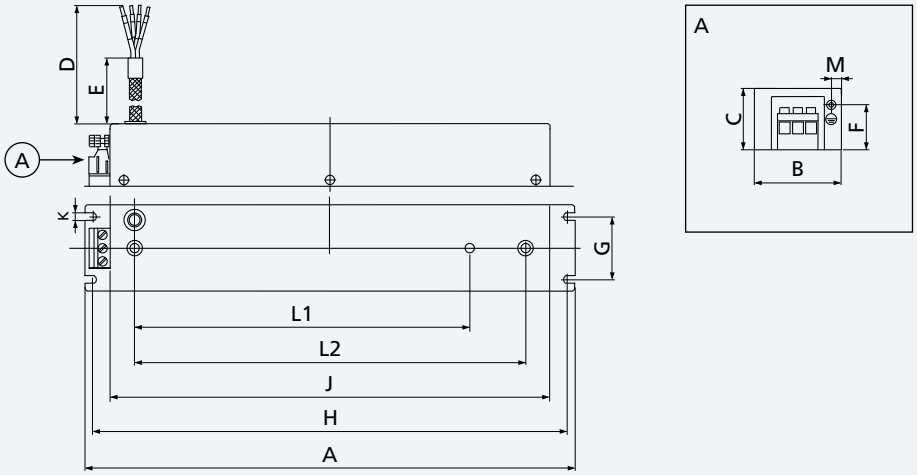

EMI filter	A	B	C	D	E	F	G	H	J	K	L1	L2	M
							[mm]						
FTV007B	351	62	45	200±10	160±10	33	45±0.2	340±0.3	315	5.5	240±0.2	280±0.2	7

Dimensions FTV018B - FTV040B

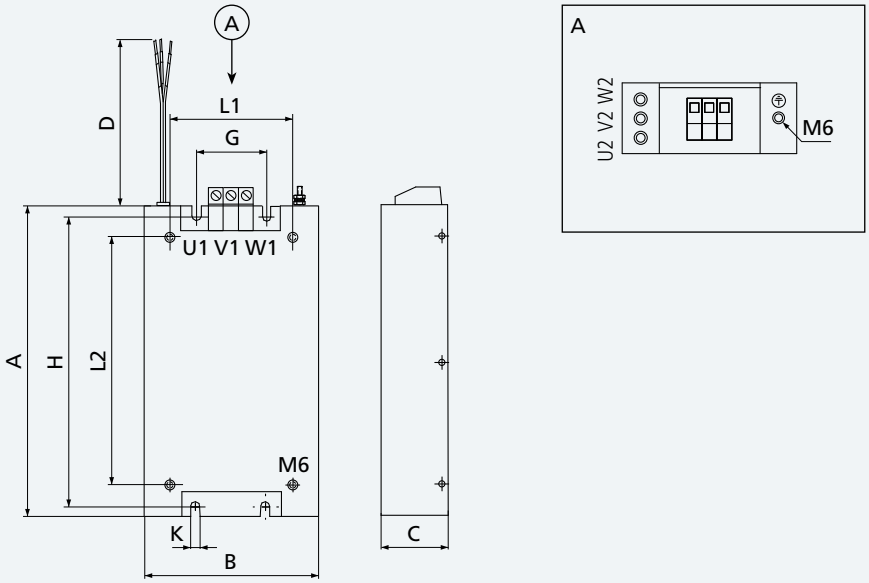

EMI filter	A	B	C	D	G	H	K	L1	L2
					[mm]				
FTV018B	315	100	65	300	35	300	6.3	76	270
FTV040B	315	125	65	300	60	300	6.3	125	270

Book type EMI filters

Mains voltage
3 x 480 VAC

Rated current
7 A … 130 A

Frequency
up to 60 Hz

Operating and storage temperature
-25 °C ... +80 °C (climate class acc. to CEI 25/80/21)

Type of protection
IP20

Maximum length of motor cables:
ACT 401-01 to -15: 25 m class B
ACT 401-18 to -25: 50 m class B
ACT 401-27 to -39: 10 m class B, 100 m class A group 1
ACT 401-43 to -49: 10 m class B, 100 m class A group 1

Note
Overload capacity is 4 times rated current at switch-on; 1.5 times rated current for 1 minute, once per hour.

Bonfiglioli Inverter		Bonfiglioli EMI filter	Rated current	Leakage current	Power dissipation	Weight
Size	Type		[A]	[mA]	[W]	[kg]
1	ACT 201-05	FTV007A	7	33	3.8	0.5
	ACT 201-07					
	ACT 201-09					
	ACT 401-05					
	ACT 401-07					
	ACT 401-09					
	ACT 401-11					
2	ACT 201-11					
	ACT 401-12					
	ACT 401-13					
	ACT 401-15					
	ACT 201-13	FTV016A	16		6.1	0.8
	ACT 201-15					
	ACT 401-18					
3	ACT 401-19					
	ACT 401-21					
	ACT 201-18	FTV030A	30		11.8	1.2
	ACT 201-19					
	ACT 401-22					
4	ACT 201-21					
	ACT 401-23					
	ACT 401-25					
	ACT 201-22	FTV055A	55		25.9	2.0
5	ACT 401-27					
	ACT 401-29					
	ACT 401-31	FTV075A	75		32.2	2.7
6	ACT 401-33	FTV100A	100		34.5	4.3
	ACT 401-35					
	ACT 401-37	FTV130A	130		43.1	4.5
	ACT 401-39					
7	ACT 401-43	FTV150	150	13	88	6.0
	ACT 401-45	FTV180	180		150	
	ACT 401-47	FTV210	210		180	12.4
	ACT 401-49	FTV250	250			

Book type EMI filters

Dimensions FTV007A ... FTV180A

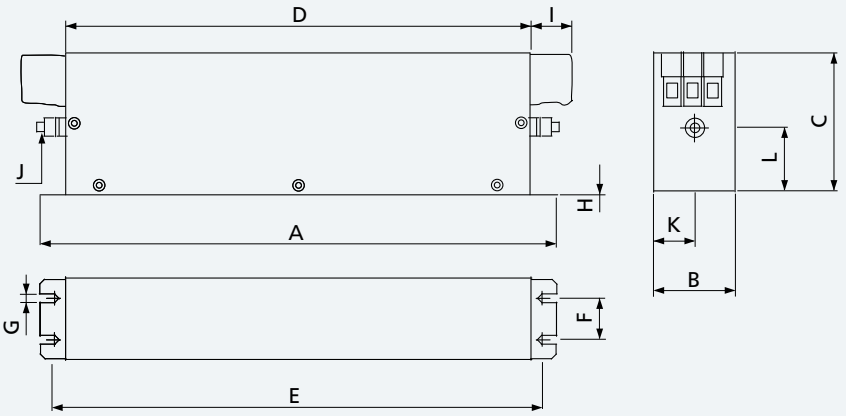

EMI filter	A	B	C	D	E	F	G	H	I	J	K	L
						[mm]						
FTV007A	190	40	70	160	180	20	4.5	1	22	M5	20	29.5
FTV016A	250	45	70	220	235	25	5.4	1	22	M5	22.5	29.5
FTV030A	270	50	85	240	255	30	5.4	1	25	M5	25	39.5
FTV055A	250	85	90	220	235	60	5.4	1	39	M6	42.5	26.5
FTV075A	270	80	135	240	255	60	6.5	1.5	39	M6	40	70.5
FTV100A	270	90	150	240	255	65	6.5	1.5	45	M10	45	64
FTV130A	270	90	150	240	255	65	6.5	1.5	45	M10	45	64
FTV180A	380	120	170	350	365	102	6.5	1.5	49.5	M10	60	47

Dimensions FTV250A

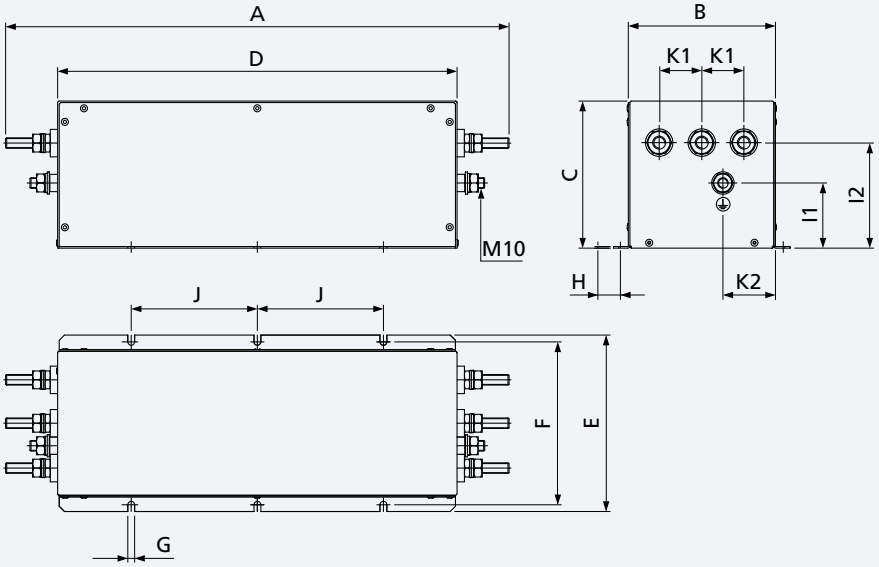

EMI filter	A	B	C	D	E	F	G	H	I1	I2	J	K1	K2
							[mm]						
FTV250A	482	140	140	380	168	155	6.5	1.5	62	100	120	40	50

Braking resistors

When speed of an inverter-controlled ac motor is reduced, the motor acts as a generator, feeding back energy to the frequency inverter. As a result, voltage in the intermediate circuit of the inverter increases. When a specific threshold is exceeded, the energy must flow to an external braking system in order to avoid drive failures. Braking resistors are designed to absorb such energy and to dissipate it into heating. The use of brake resistors allows drives to fulfil the requirements of particularly severe duty cycles, for example those featured by frequent braking, long lasting braking or impulsive braking.
Bonfiglioli Vectron offers a wide range of safe and compact braking resistors with IP20 degree of protection: "BR series".
BR series are designed for panel mounting.
Mostly, they are equipped with built-in thermal protection.
BR models have been thoroughly tested with Bonfiglioli frequency inverters, therefore they can be used together with all Active, Synplus, and VCB models.

Connection diagram

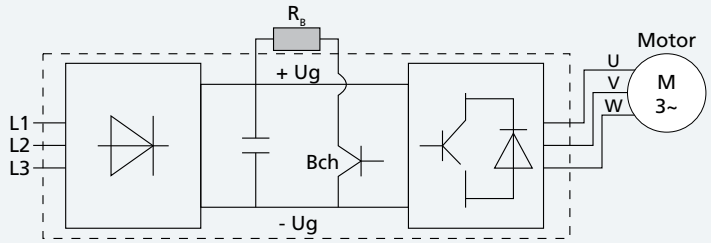

R_B = external braking resistor
Bch = brake chopper integrated in standard Active Cube inverter

Connection terminals

The R_{b1} and R_{b2} braking resistor terminals on Active frequency inverters are located on the X2 power output terminal strip. Access to these terminals on size 1 and 2 units is made even easier by the use of disconnectable power terminal strips. Refer to the manual provided with your frequency inverter for further details on materials and connection methods.

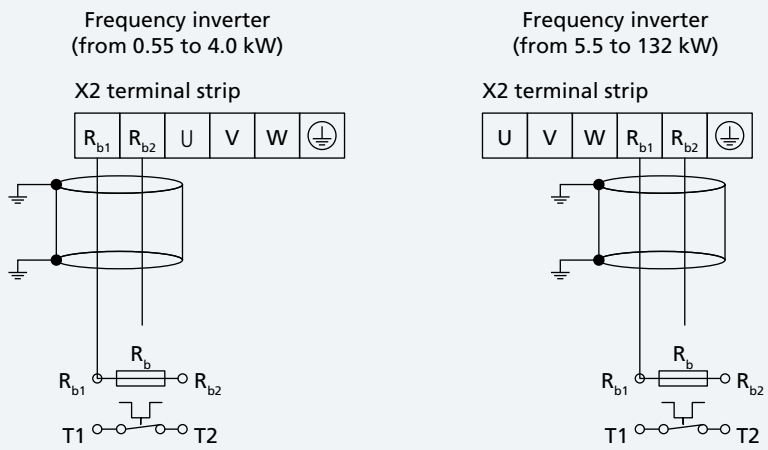

Braking resistors

Active drive combination chart
These charts show recommended combinations for each model in the Active range, and specify the corresponding duty cycles on the basis of rated drive power. Contact your nearest Bonfiglioli Drive Centre for particularly heavy-duty braking applications or if you need to customise a product.

Active Series		Bonfiglioli braking resistor	Resistance	Continuous rated power	Duty cycle at the drive's rated power
	kW		Ohm		[W]
ACT 201-05	0.55	BR 160/100	100	160	29%
ACT 201-07	0.75	BR 160/100	100	160	21%
ACT 201-09	1.1	BR 160/100	100	160	15%
ACT 201-11	1.5	BR 432/37	37	432	29%
ACT 201-12	2.2	BR 432/37	37	432	20%
ACT 201-15	3	BR 432/37	37	432	14%
ACT 201-18	4	BR 667/24	24	667	17%
ACT 201-19	5.5	BR 667/24	24	667	12%
ACT 201-21	7.5	BR 1333/12	12	1333	18%
ACT 201-22	9.2	BR 1333/12	12	1333	14%
ACT 401-05	0.55	BR 213/300	300	213	39%
ACT 401-07	0.75	BR 213/300	300	213	28%
ACT 401-09	1.1	BR 213/300	300	213	19%
ACT 401-11	1.5	BR 213/300	300	213	14%
ACT 401-12	1.85	BR 471/136	136	471	25%
ACT 401-13	2.2	BR 471/136	136	471	21%
ACT 401-15	3	BR 471/136	136	471	16%
ACT 401-18	4	BR 696/92	92	696	17%
ACT 401-19	5.5	BR 1330/48	48	1330	24%
ACT 401-21	7.5	BR 1330/48	48	1330	18%
ACT 401-22	9.2	BR 1330/48	48	1330	14%
ACT 401-23	11	BR 2000/32	32	2000	18%
ACT 401-25	15	BR 2000/32	32	2000	13%
ACT 401-27	18.5	BR 4000/16	16	4000	22%
ACT 401-29	22	BR 4000/16	16	4000	18%
ACT 401-31	30	BR 4000/16	16	4000	13%
ACT 401-33	37	BR 8000/7	7.5	8000	22%
ACT 401-35	45	BR 8000/7	7.5	8000	18%
ACT 401-37	55	BR 8000/7	7.5	8000	15%
ACT 401-39	65	BR 8000/7	7.5	8000	12%
ACT 401-43	75	BR8000/7	7.5	8000	11%
ACT 401-45	90	2xBR8000/7	3.75	16000	18%
ACT 401-47	110	2xBR8000/7	3.75	16000	15%
ACT 401-49	132	2xBR8000/7	3.75	16000	12%

For further information refer to the Bonfiglioli braking resistor catalogue.

Bonfiglioli Worldwide Presence

Bonfiglioli is located in regions and countries around the world that enable us to provide faster sales and service to customers. Our network includes more than 35 service centers worldwide, with 12 facilities that manufacture and assemble products that are specific to the mining industry.

We are around the world, and around the corner.

LOCAL SUPPORT

SALES, CUSTOMER SERVICE, WARRANTY, TECH SUPPORT, SPARE PARTS

22 BRANCH OFFICES IN **16** COUNTRIES

WORLDWIDE DISTRIBUTION NETWORK

Bonfiglioli is your partner worldwide for power transmission and motion control.

Customer satisfaction has always been one of Bonfiglioli's key values. It is pursued around the world, and in a wide range of contexts, by a network of subsidiaries located in 17 countries and on 5 continents. Each subsidiary provides rapid and efficient pre-sales and after-sales service, and can guarantee prompt deliveries from local assembly plant and warehouses. In addition to our directly controlled subsidiaries, Bonfiglioli can also rely on an extensive network of authorised dealers, selected for their ability to guarantee excellent pre-sales and after-sales assistance.
To give everybody the chance to purchase a Bonfiglioli product - anywhere.
This is the ambitious objective that drives the development of our added value sales networks, off and on-line.
BEST (Bonfiglioli Excellence Service Team) is one of the most modern sales organisations in the field of power transmission.
Our BEST partners can benefit from our local assembly plant and warehouses, our training courses and tools, and our promotional activities.
For the first time ever, manufacturer and distributors are working together from the product assembly stage and in the design of new applications, in a sharing process that sees one party transferring know-how and technology and the other partly providing a thorough knowledge of the local market.

Bonfiglioli Worldwide Locations

Bonfiglioli Australia
www.bonfiglioli.com.au
2, Cox Place Glendenning NSW 2761
Locked Bag 1000 Plumpton NSW 2761
Tel. (+ 61) 2 8811 8000 - Fax (+ 61) 2 9675 6605

Bonfiglioli Brasil
www.bonfigliolidobrasil.com.br
Travessa Cláudio Armando 171
Bloco 3 - CEP 09861-730 - Bairro Assunção
São Bernardo do Campo - São Paulo
Tel. (+55) 11 4344 2323 - Fax (+55) 11 4344 2322

Bonfiglioli Canada
www.bonfigliolicanada.com
2-7941 Jane Street - Concord, Ontario L4K 4L6
Tel. (+1) 905 7384466 - Fax (+1) 905 7389833

Bonfiglioli China
www.bonfiglioli.cn
Bonfiglioli Drives (Shanghai) Co., Ltd.
#68, Hui-Lian Road, QingPu District,
201707 Shanghai
Ph. (+86) 21 6700 2000 - Fax (+86) 21 6700 2100

Bonfiglioli Deutschland
www.bonfiglioli.de
Industrial, Mobile, Wind
Sperberweg 12 - 41468 Neuss
Tel. +49 (0) 2131 2988 0 - Fax +49 (0) 2131 2988 100
Industrial
Europark Fichtenhain B6 - 47807 Krefeld
Tel. +49 (0) 2151 8396 0 - Fax +49 (0) 2151 8396 999
O&K Antriebstechnik
Ruhrallee 8-12 - 45525 Hattingen
Tel. +49 (0) 2324 2050 1 - Fax +49 (0) 2324 2054 29

Bonfiglioli España
www.tecnotrans.bonfiglioli.com/es-es/
Industrial, Mobile, Wind
Tecnotrans Bonfiglioli S.A.
Pol. Ind. Zona Franca sector C, calle F, n°6
08040 Barcelona
Tel. (+34) 93 4478400 - Fax (+34) 93 3360402

Bonfiglioli France
www.bonfiglioli.fr
14 Rue Eugène Pottier
Zone Industrielle de Moimont II - 95670 Marly la Ville
Tel. (+33) 1 34474510 - Fax (+33) 1 34688800

Bonfiglioli India
www.bonfiglioli.in
Bonfiglioli Transmissions Pvt. Ltd.
Plot No. AC7-AC11, SIDCO Industrial Estate,
Thirumudivakkam - 600 044 Chennai
Tel.: +91 44 2478 1035

Bonfiglioli Italia
www.bonfiglioli.it
Headquarters
Bonfiglioli Riduttori S.p.A.
Via Giovanni XXIII, 7/A
Lippo di Calderara di Reno - 40012 Bologna
Tel. +39 051 647 3111 - Fax +39 051 647 3126
Mobile, Wind
Via Enrico Mattei, 12 Z.I. Villa Selva - 47100 Forlì
Tel. +39 0543 789111 - Fax +39 0543789242
Industrial
Via Bazzane, 33/A - 40012 Calderara di Reno (BO)
Tel. +39 051 6473111 - Fax +39 051 6473330
Industrial
Via Trinità, 1 - 41058 Vignola (MO)
Tel. +39 059 768511 - Fax +39 059 768522
Industrial
Via Sandro Pertini lotto 7b - 20080 Carpiano (Milano)
Tel. (+39) 02 985081 - Fax (+39) 02 985085817
Bonfiglioli Mechatronic Research
Via F. Zeni 8 - 38068 Rovereto (Trento)
Tel. (+39) 0464 443435/36 - Fax (+39) 0464 443439

Bonfiglioli New Zealand
www.bonfiglioli.co.nz
88 Hastie Avenue, Mangere Bridge, 2022 Auckland
PO Box 11795, Ellerslie
Tel. (+64) 09 634 6441 - Fax (+64) 09 634 6445

Bonfiglioli South East Asia
www.bonfiglioli.com
24 Pioneer Crescent #02-08
West Park Bizcentral - Singapore, 628557
Tel. (+65) 6268 9869 - Fax. (+65) 6268 9179

Bonfiglioli South Africa
www.bonfiglioli.co.za
55 Galaxy Avenue, Linbro Business Park - Sandton
Tel. (+27) 11 608 2030 OR - Fax (+27) 11 608 2631

Bonfiglioli Türkiye
www.bonfiglioli.com.tr
Atatürk Organize Sanayi Bölgesi, 10007 Sk. No. 30
Atatürk Organize Sanayi Bölgesi, 35620 Çiğli - Izmir
Tel. +90 (0) 232 328 22 77 (pbx) - Fax +90 (0) 232 328 04 14

Bonfiglioli United Kingdom
www.bonfiglioli.co.uk
Industrial
Unit 7, Colemeadow Road
North Moons Moat - Redditch, Worcestershire B98 9PB
Tel. (+44) 1527 65022 - Fax (+44) 1527 61995
Mobile, Wind
3 - 7 Grosvenor Grange, Woolston
Warrington - Cheshire WA1 4SF
Tel. (+44) 1925 852667 - Fax (+44) 1925 852668

Bonfiglioli USA
www.bonfiglioliusa.com
3541 Hargrave Drive Hebron, Kentucky 41048
Tel. (+1) 859 334 3333 - Fax (+1) 859 334 8888

Bonfiglioli Vietnam
www.bonfiglioli.vn
Lot C-9D-CN My Phuoc Industrial Park 3
Ben Cat - Binh Duong Province
Tel. (+84) 650 3577411 - Fax (+84) 650 3577422

Bonfiglioli
Forever Forward

We have a relentless commitment to excellence, innovation and sustainability. Our team creates, distributes and services world-class power transmission and drive solutions to keep the world in motion.

HEADQUARTERS
Bonfiglioli Riduttori S.p.A.
Via Giovanni XXIII, 7/A
40012 Lippo di Calderara di Reno
Bologna (Italy)
tel: +39 051 647 3111
fax: +39 051 647 3126
bonfiglioli@bonfiglioli.com
www.bonfiglioli.com

VE_CAT_ACT_STD_ENG_R00_1