Brake Motors

General Catalogue

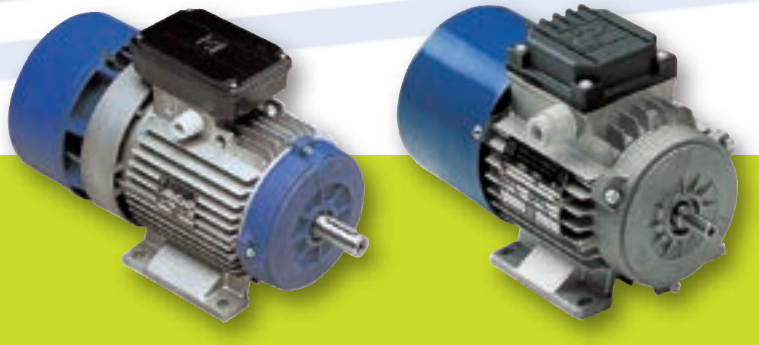

index

GENERAL INFORMATION	4
PRODUCT RANGE: POWER AND POLES	5
MOTOR DESIGNATION	6
STANDARDS AND APPROVALS	7
CE MARK - UL AND CSA STANDARDS - BIS CERTIFICATION	
CCC DECLARATION - EAC DECLARATION	
MOTOR IDENTIFICATION NAMEPLATE	8
TOLERANCES - STANDARD AND SPECIAL FLANGES	9
TYPE OF COSTRUCTIONS AND MOUNTING ARRANGEMENTS	10
ENCLOSURE RATINGS	11
BEARINGS	12
RECTIFIERS	13
MOTOR VOLTAGE AND FREQUENCY SUPPLY, OPERATING AT 60 HZ	14
SERVICE DUTY TYPES	15
MOTOR RUNNING ON INVERTER	16
BALANCING - NOISE - MANUAL BRAKE RELEASE AND SHAFT ROTATION	17
TEMPERATURE, ALTITUDE, HUMIDITY	18
PROTECTION AND MONITORING DEVICES	19
EFFICENCY	20
TEST AND CONTROL DOCUMENTS	21
COMPONENTS MATERIALS AND DIMENSIONS	22
BA-BAX SERIES GENERAL CHARACTERISTICS	24
AIR GAP ADJUSTMENT, BRAKE TORQUE ADJUSTMENT	26
PERMISSIBLE START FREQUENCY AT LOAD, BRAKE COIL WIRING DIAGRAM	
BRAKE TORQUE AND BRAKE SPRINGS COMPRESSION	27
TECHNICAL DATA SINGLE SPEED MOTORS CONTINUOUS DUTY (2, 4 POLES)	28
TECHNICAL DATA SINGLE SPEED MOTORS CONTINUOUS DUTY (6, 8 POLES)	29
TECHNICAL DATA TWO SPEED MOTORS SINGLE WINDING (2/4 POLES)	30
TECHNICAL DATA TWO SPEED MOTORS SINGLE WINDING (4/8 POLES)	31
TECHNICAL DATA TWO SPEED MOTORS TWO WINDINGS (2/6 POLES)	32
TECHNICAL DATA TWO SPEED MOTORS TWO WINDINGS (2/8 POLES)	33
TECHNICAL DATA TWO SPEED MOTORS TWO WINDINGS (4/6 POLES)	34
TECHNICAL DATA TWO SPEED MOTORS TWO WINDINGS (4/12 POLES)	35
TECHNICAL DATA TWO SPEED MOTORS TWO WINDINGS (2/12 POLES)	36
HOISTING MOTORS 4/16 POLES	
STARTING AND BRAKING TIME, BRAKE DISC LININGS WEAR	37
BA-BAX AND BAH-BAHX SERIES DIMENSIONS	38
BM-BMX SERIES GENERAL CHARACTERISTICS	40

42 BM SERIES BRAKE GROUP, AIR GAP ADJUSTMENT
PERMISSIBLE STARTING FREQUENCY WITH LOAD
43 RECTIFIERS WIRING DIAGRAM AND BRAKE REACTION TIME
BRAKING TIME CALCULATION
44 TECHNICAL DATA SINGLE SPEED MOTORS CONTINUOUS DUTY (2, 4 POLES)
45 TECHNICAL DATA SINGLE SPEED MOTORS CONTINUOUS DUTY (6, 8 POLES)
46 TECHNICAL DATA TWO SPEED MOTORS SINGLE WINDING (2/4, 4/8 POLES)
47 TECHINICAL DATA TWO SPEED MOTORS TWO WINDINGS (2/6, 2/8 POLES)
48 TECHNICAL DATA TWO SPEED MOTORS TWO WINDINGS (4/6, 4/12 POLES)
49 BM-BMX SERIES DIMENSIONS
50 BA-BM ENHANCED POWER (EP) INTERMITTENT DUTY S3 60%
54 TRAVERSE MOTORS WITH PROGRESSIVE START AND STOPS (SERRIE PV)
56 BAH-BAHX SERIES
58 SERIES BAHX TECHNICAL DATA, CONTINUOUS DUTY (2, 4 POLES)
59 SERIES BAHX TECHNICAL DATA, CONTINUOUS DUTY (6, 8 POLES)
60 BAH-BAHX 80-315 SERIES DIMENSIONS
62 HOIST MOTORS (BAPK SERIES)
PREMIUM BRAKE TORQUE MOTORS (BAF SERIES)
63 FORCED COOLING MOTORS
64 BUILT-IN ENCODER MOTORS
65 BAE-BAHE SERIES DIMENSIONS
66 BMEAV SERIES DIMENSIONS
67 R SERIES
69 MOTORS FOR WIND GENERATION, MOTORS FOR AUTOMATIC INDUSTRIAL DOORS
70 BMBM SERIES (DOUBLE BRAKE MOTORS)
71 BMBM SERIES DIMENSIONS (2, 4 POLES)
72 BMBM SERIES DIMENSIONS (6, 8 POLES)
73 BMBM SERIES DIMENSIONS
74 USA AND CANADA
77 INDIA
78 CHINA
79 RUSSIA - AUSTRALIA AND NEW ZEALAND
RECOVERY AND DISPOSAL
80 PACKAGING - SPECIAL FEATURES AND OPTIONS
82 SPARE PARTS BA-BAX SERIES
84 SPARE PARTS BAH-BAHX SERIES
86 SPARE PARTS BM-BMX SERIES

general information

MGM brake motors are asynchronous three-phase totally enclosed fan cooled motors (TEFC). The motor brakes in case of power supply failure. The braking action is always obtained through a very quick and precise stop and it guarantees a safe and prompt intervention in case of power failure.
The braking action is obtained without shaft axial sliding and it provides equal braking torque in both directions of rotation. MGM brake motors are particularly suitable for hoist and traverse machines, tooling machinery, automatic and transfer machinery in textile, ceramic and packing fields and in all those situations where precision and quickness in braking are required. MGM brake motors are designed and assembled as real brake motors. The perfect engineering and assembling combined with a strong and safe brake, make these motors very reliable.
The brake disc lining material is asbestos free with high friction coefficient and very long lasting. The motors are provided with the IP 54 enclosure rating and insulation class F. On request they can be provided with the IP 55 or IP 56 enclosure ratings and with insulation class H. All MGM motors are designed for inverter duty. On request it is possible to supply the motor with an encoder fitted on the shaft's non drive end (NDE), or to have the shaft predisposed for encoder fitting. For further information please refer to the encoder series section.
MGM brake motors series are: BA and BM.

BA series

The BA series consists of three phase, asynchronous brake motors totally enclosed fan cooled (TEFC). The BA series range starts from 71 up to 315 frame size. As standard, the brake power supply is AC 3-phase. On request DC brake can be provided with a rectifier integrated in the terminal box. The rectifier is provided with an over-voltage protection device. All BA series motors are provided with manual brake release. The BA series cooling fan is fitted between the motor and the braking assembly. The brake moving element and the brake coil have a laminated magnetic nucleus to reduce losses and to allow very fast brake.
BA series main features are a very quick braking action, both in realeasing and braking operation, a high brake torque, a constant braking time and a very high number of start/stop cycles also under severe applications.

BM series

The BM series consists of three phase, asynchronous brake motors totally enclosed fan cooled (TEFC). The BM series range starts from 56 up to 225 frame size. As standard the brake power supply is DC 1-phase with a rectifier integrated in the terminal box. The rectifier is provided with an over-voltage protection device. The cooling fan is fitted at non-drive shaft end.
BM series main features are a low braking noise, a gradual acceleration during the motor start and stop and reduced overall dimensions.

The BA and BM series are also available in the following main versions:

X (BAX, BMX) for continuous duty and IE2 / IE3 efficiency class (regulation EU 2019/1781). Alternatively the BA, BM series can be made in the 'Enhanced Power' version for intermittent duty only.

H (BAH) with brake assembly enclosure with higher IP protection degree.

PV (BAPV, BMPV): with flywheel that allow progressive start and stop, particularly suitable for traverse application.

F (BAF): with double brake disc and extremely high brake torque.

AV-SV with forced cooling (BMAV with axial forced cooling, BASV with double radial forced cooling).

BM (BMBM) with double brake particularly suitable to be used in TV-cine studios and theatres stages.

E (BAE, BME) with built-in encoder.

K (BAPK, BAK) with K brake disc for hoisting applications.

The table below shows the production range. For single speed motors, starting from 0.12 kW, only those in BAX, BAHX, BMX version for continuous duty and efficiency class compliant with European regulation EU 2019/1781 are listed. Further powers are available for the BA and BM series motors in the 'Enhanced Power' version for intermittent duty only (see page 52).

Motor type	Series	2 pole kW	4 pole kW	6 pole kW	8 pole kW	2/4 pole kW	4/8 pole kW	2/6 pole kW	2/8 pole kW	4/6 pole kW	4/12 pole kW S3 40%	2/12 pole kW S3 40%	4/16 pole kW S4 40% - 4 pole S4 25% - 16 pole
56 A	BM	0.09	0.06	0.04									
56 B	BM	0.12	0.09	0.06									
63 A	BM	0.18	0.12										
63 B	BM	0.25	0.18			0.22/0.15							
63 C	BM		0.22	0.09		0.26/0.17			0.18/0.04				
63 D	BM			0.12	0.07								
71 A	BM BA	0.37	0.25	0.18	0.08	0.25/0.18	0.13/0.07						
71 B	BM BA	0.55	0.37	0.25	0.12	0.37/0.25	0.18/0.09	0.25/0.08	0.25/0.06				
71 C	BM BA		0.55				0.22/0.12	0.35/0.1	0.35/0.07	0.18/0.11			
80 A	BM BA	0.75	0.55	0.37	0.18	0.65/0.45	0.25/0.18	0.37/0.12	0.37/0.09	0.25/0.18	0.25/0.05		
80 B	BM BA	1.1	0.75	0.55	0.25	0.88/0.62	0.37/0.25	0.55/0.18	0.55/0.12	0.37/0.25	0.37/0.07	0.45/0.07	
90 SA	BM BA	1.5	1.10	0.75	0.37		0.75/0.37	0.9/0.3		0.55/0.37	0.4/0.13	0.75/0.11	
90 SB	BM BA					1.3/0.9			0.75/0.18				
90 LA	BM BA	2.2	1.50	1.10	0.55	1.8/1.2		1.2/0.4	1.1/0.25		0.55/0.18	1.1/0.15	
90 LB	BM BA					2.2/1.5	1.1/0.6	1.4/0.5	1.3/0.3	0.75/0.55	0.75/0.22		
100 LA	BM BA		2.2	1.50	0.75	2.2/1.5		1.6/0.6	1.6/0.4	1.1/0.8	0.9/0.25		
100 LB	BM BA	3.0			1.1	3.1/2.3	1.6/0.9	2.2/0.8	2.2/0.5	1.5/1.0	1.1/0.35	1.85/0.25	
112 MB	BM BA		3.0		1.5	4.5/3.3	2.2/1.2	3.0/1.0	3.0/0.8	2.0/1.3	1.5/0.45	3.0/0.45	
112 MC	BM BA	4.0	4.0	2.2									
132 SA	BM BA	5.5									2.5/0.8		
132 SB	BM BA	7.5	5.5	3.0	2.2	5.0/4.5	3.0/2.0	4.0/1.3	4.0/1.1	2.2/1.5		4.0/0.65	
132 MA	BM BA	9.2	7.5	4.0		6.0/5.0	4.0/2.7	5.5/1.8	5.5/1.5	3.0/2.2	3.0/1.0	5.5/0.9	2.8/0.7
132 MB	BM BA			5.5	3.0	7.5/6.0	6.0/4.0	7.0/2.2	7.0/1.8	3.7/2.5	4.0/1.3	7.0/1.1	4.0/1.1
160 MA	BM BA	11.0	9.2	5.5	4.0	9.5/8.0							5.5/1.3
160 MB	BM BA	15.0	11.0	7.5	5.5	11.0/9.0	6.5/4.5	8.0/2.5	8.0/2.2	5.5/3.7	4.8/1.6	8.0/1.3	7.3/1.8
160 LA	BM BA	18.5	15.0	9.2	7.5	13.0/11.0	9.5/6.0	11.0/3.6	11.0/3.0			11.0/1.8	
160 LB	BM BA			11.0						7.5/5.0	7.3/2.4		10.0/2.5
180 LA	BM BA	22.0	18.5			17.0/14.0	11.0/8.0			11.0/7.5			13.2/3.0
180 LB	BM BA		22.0	15.0	11.0	20.5/17.0	14.0/9.0	16.0/6.5	16.0/4.0	13.0/8.8		16.0/2.6	
200 LA	BM BA	30.0		18.5	15.0		18.0/11.0						
200 LB	BM BA	37.0	30.0	22.0		24.0/20.0	21.0/13.0		18.5/4.5	15.0/10.5			16.0/4.0
225 S	BM BAH		37.0		18.5	37.0/30.0	30.0/18.0		24.0/6.0				19.0/4.8
225 M	BM BAH		45.0	30.0	22.0	45.0/35.0	35.0/25.0		30.0/7.5				24.0/6.0
250 M	BAH		55.0	37.0	30.0		42.0/30.0						30.0/7.5
280 S	BAH		75.0	45.0	37.0		45.0/33.0						45.0/10.0
280 M	BAH		90.0	55.0	45.0		55.0/40.0						55.0/12.0
315 S	BAH		110.0	75.0	55.0								
315 M	BAH		132.0	90.0	75.0		86.0/58.0						

Note: all motors indicated in the table above can also be produced as standard asynchronous three phase motors without brake (SMX or SM Series)

motor designation

The following technical characteristics are used to correctly identify MGM motors:

Series	BAX, BMX,... 1	example: **BAX**
Frame size	56 - 315 mm	example: **71**
Power and poles	0.04 - 132 kW 2 4 6 8 2/4 4/8 2/6 2/8 4/6 4/12 pole 2	example: **0.37 kW 4 Pole** or B 4 (see technical data)
Efficiency class	IE2 -IE3	example: **IE2**
Mounting	see mounting section	example: **IM B5**
Voltage and frequency	according to customer request	example: **230/400V 50 Hz**
Brake supply	AC or DC 3 single or double terminal board box 4	example: **AC brake coil double terminal board box** for separate brake supply
Insulation class	F or H	example: **class F**
Enclosure	IP54, IP55, IP56	example: **IP 54**

It is necessary to indicate any special features or options not supplied as standard (see page 67), such as reduced diameter flanges, thermal protectors, tropical environment execution, etc. Unless otherwise specified, the brake supply voltage is the same as the motor voltage. Unless otherwise specified, the DC brake voltage supply is 230V 50/60 Hz.

1

The BMX and BAX series are also available in BMXPV and BAXPV version with soft start and stop suitable for traversing, and the version (BMX)SV, (BAX)SV with forced cooling fan. The BAX series is also available in the BAXF version, with double brake disc and premium brake torque.

2

In two speed motors, the model number is followed by the letter D on motors with Dahlander winding, and by the letters DA on motors incorporating two separate windings (i.e. BADA 71 B 2/8).

3

BA series motors are available with both DC and AC brakes while BM series motors are available with DC brakes only. Brake Motors equipped with a DC brake and a power supply higher than 24V are supplied with a suitable rectifier located inside the terminal box.

4

Single speed motors can be provided with a single terminal box with the motor and brake power terminals connected in parallel, or with a double terminal board, having the supply separated from the motor. Unless otherwise specified, single speed motors up to 90 frame size are provided with just one terminal board. Motors with frame size 100 and above are provided as standard feature with a double terminal board box. On two speed motors, the motor power supply is always separate from the brake power supply. On single speed motors with separate brake power supply a double terminal board box has to be provided. A double terminal board box also has to be provided on motors with the following options or auxiliary devices: thermo protectors (PTO), thermistors (PTC), anti-condensation heaters, forced cooling, IP 56-65-66 enclosure, EMI filters, DC brake with brake power supply higher than 254V, brake voltage different from motor voltage, motor voltage 400 50Hz DELTA connection , encoder, microswitch, terminal box on side.

Example BAX 71 B4 0,37 kW IE2 230/400V 50Hz class F IP 54 IM B5 AC brake coil, double terminal board box

Description	IEC	CENELEC
Ratings and performance	IEC 60034-1	EN 60034-1
Efficiency classes	IEC 60034-30-1	EN 60034-30-1
Standard test methods for determining losses and efficiency	IEC 60034-2-1	EN 60034-2-1
Cooling methods for rotating electrical machines	IEC 60034-6	EN 60034-6
Terminal markings and direction of rotation of rotating machines	IEC 60034-8	EN 60034-8
Characteristics of mountings and types of installation	IEC 60034-7	EN 60034-7
Starting performance of asynchronous three phase single speed cage motors	IEC 60034-12	EN 60034-12
Classification of protection degree of rotating electrical machines	IEC 60034-5	EN 60034-5
Mechanical vibrations of machines with shaft height 56 mm and higher. Measurement, assessment and limits of vibration severity	IEC 60034-14	EN 60034-14
Fixing dimensions and rating powers	IEC 60072	EN 50347
Noise limits	IEC 60034-9	EN 60034-9

CE mark

MGM brake motors have the CE mark on the nameplate to indicate the conformity to the requirements of the Union harmonization legislations 2014/35/EU “Low Voltage Directive” and 2014/30/EU “Electromagnetic Compatibility”.

UKCA marking

MGM motors with CE marking are provided also with UKCA marking. The UKCA marking is a product marking that is used for motors being placed on the market in Great Britain.

UL and CSA standards

On request MGM motors can be provided with cCSAus approval in conformity with the requirements of the standards UL 1004-1 “Electric motors” and CSA C 22.2 No. 100 “Motors and generators” for the North American market. The approved motors show the cCSAus mark on the nameplate. For more info please see the related paragraph (Motors for Usa and Canada, page 74).

BIS certification

MGM motors can be provided, on request, with BIS certification (standard IS 12615:2018) that is the compulsory certification in India. Certified motors show the ISI mark on the nameplate. For more info please see the related paragraph (India, page 77).

CCC declaration

On request MGM motors can be provided with CCC (China Compulsory Certification) declaration for the Chinese market. The approved motors show the CCC mark on the nameplate. For more info please see the related paragraph (China, page 78).

EAC declaration

On request MGM motors can be provided with EAC declaration for the Eurasian Custom Union countries (Russia, Belarus, Kazakhstan). For more info please please see the related paragraph (Page 79).

motor identification nameplate

Every motor is provided with an identifying nameplate, on which specific motor information is given. Motor nameplates are shown below with motor data and explanatory notes. The nameplate shown on the left is used for single speed motors while the nameplate on the right is used for two speed motors. A QR code is on the nameplate of each motor through which you can link to a specific page and access various documents including the use and maintenance manual, electrical connections diagrams, certifications, and technical data sheets relating to the specific series of motors.

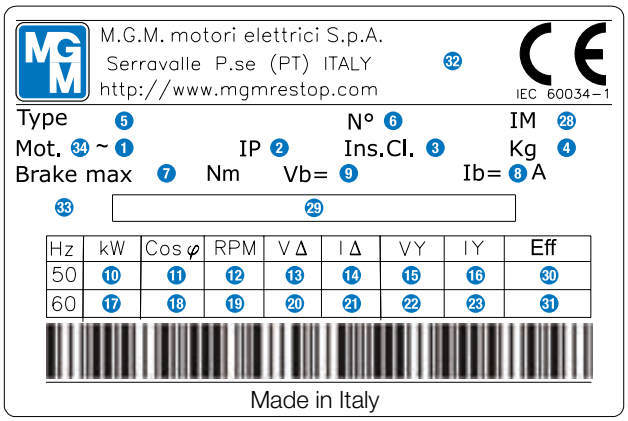

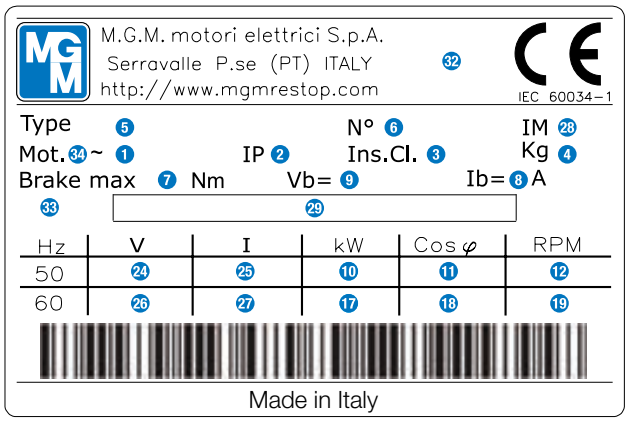

1 Duty type
2 Protection degree
3 Insulation Class, the letters TR following the insulation class indicate tropicalized treatment
4 Weight (Kg)
5 Motor type Designation
6 Serial number
7 Maximum Static Brake Torque obtainable with proper regulation of the springs (Nm)
8 Brake current (A)
9 Brake Voltage Supply (V). On brake motors with AC brake, the symbol “Vb = Vm” indicates that the motor and brake have the same voltage supply. For the motor with DC brake the indication 1~230V or 1~400V represent the AC side single phase input voltage to the rectifier (230V or 400V)
10 Rated Power (kW) at 50 Hz
11 Power Factor at 50 Hz
12 Motor Speed (RPM) at 50 Hz
13 Motor Voltage Supply at 50 Hz, Delta connected
14 Motor Amps at 50 Hz, Delta connected
15 Motor Voltage Supply at 50 Hz, Star connected
16 Motor Amps at 50 Hz, Star connected
17 Rated Power (kW) at 60 Hz
18 Power Factor at 60 Hz
19 Motor Speed (RPM) at 60 Hz
20 Motor Voltage Supply at 60 Hz, Delta connected
21 Motor Amps at 60 Hz, Delta connected
22 Motor Voltage Supply at 60 Hz, Star connected
23 Motor Amps at 60 Hz, Star connected
24 Motor voltage supply at 50 Hz
25 Motor Amps at 50 Hz
26 Motor voltage supply at 60 Hz
27 Motor Amps at 60 Hz
28 Mounting
29 For motors with forced cooling fans, the fan voltage supply is shown in this location, preceded by the letters “VENT”. The letters “TP” indicate the presence of bimetallic thermal protectors, “TM” indicate thermistors, and “SCALD” indicates anti-condensation heaters, all followed by the voltage supply
30 Efficiency and efficiency class at 50Hz
31 Efficiency and efficiency class at 60Hz
32 Certification marks (SP, CCC, etc.)
33 If the letters “DM” appear in this location, it means that the motor is supplied with a double terminal board box for a separate brake feeding
34 Motor phases number (3 = three phase; 1 = single phase)

Note: on motor nameplates with special execution additional information or information placed in different fields can be present.

Electromechanical characteristics tolerances

The table below, describes the electromechanical tolerances concerning electric motors, according to the EN 60034-1 standard.

Parameter		Tolerance	
Efficiency	η	-0.15 (1 - η)	Rated power ≤ 150 kW
Power factor	$\cos\varphi$	-(1 - $\cos\varphi$) / 6	min 0,02 - max 0,07
Slip		±30% ±20%	Rated power < 1 kW Rated power ≥ 1 kW
Locked rotor current		+20%	
Moment of Inertia		±10%	the guarateed value
Locked rotor torque		-15% +25%	the guarateed value the guarateed value (upon request it is possibile to exceed the +25% value)

Mechanical tolerances

The table below describes the mechanical tolerances in accordance with the IEC 72 standard.

Characteristic	Tolerance	
Shaft height	-0,5 mm	
Flange spigot	j6 h6	for motors with shaft heights ≤ 160 mm for motors with shaft heights > 180 mm
Shaft end diameter	j6 k6 m6	Ø from 9 mm up to 28 mm Ø from 38 mm up to 48 mm Ø from 55 mm up to 75 mm

Standard and special flanges

The table below shows the dimensions of the standard flanges and of the special ones available along with the shaft dimensions. NEMA flanges and shafts are available on request.

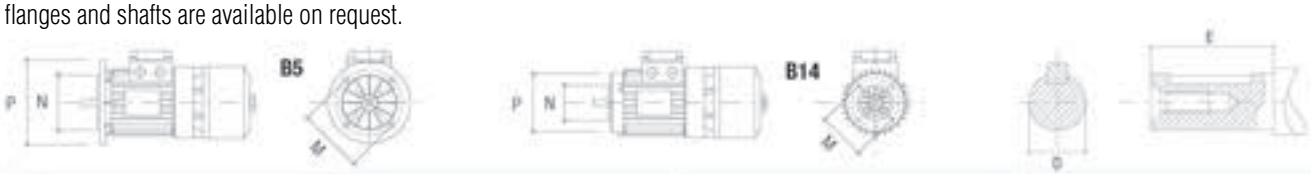

Motor frame size	Shaft drive end dimensions (DxE) (mm)	Flange type	Flange dimensions (P/M/N) (mm)
IEC 56	9x20	B5 (standard)	120/100/80
	9x20	B14 (standard)	80/65/50
IEC 63	11x23	B5 (standard)	140/115/95
	11x23	B14 (standard)	90/75/60
	11x23	B14-R (56)	(80) 90/65/50***
IEC 71	14x30	B5 (standard)	160/130/110
	14x30	B5-R (56)*	120/100/80
	14x30	B5-R/M (63)*	140/115/95
	14x30	B5-M	200/165/130
	14x30	B14 (standard)	105/85/70
	14x30	B14-R	(90) 105/75/60***
IEC 80	19x40	B5 (standard)	200/165/130
	19x40	B5-R	160/130/110
	19x40	B14	120/100/80
	19x40	B14-R	(105) 120/85/70***
IEC 90	24x50	B5 (standard)	200/165/130
	24x50	B5-R	160/130/110
	24x50	B14 (standard)	140/115/95
	24x50	B14-R	(120) 140/100/80***
IEC 100	28x60	B5 (standard)	250/215/180
	28x60	B5-R**	200/165/130
	28x60	B14 (standard)	160/130/110
IEC 112	28x60	B5 (standard)	250/215/180
	28x60	B14 (standard)	160/130/110
IEC 132	38x80	B5 (standard)	300/265/230
	38x80	B5-R	250/215/180
	38x80	B14 (standard)	200/165/130
IEC 160	42x110	B5 (standard)	350/300/250
	42x110	B5-R	300/265/230
IEC 180	48x110	B5 (standard)	350/300/250
IEC 200	55x110	B5 (standard)	400/350/300
IEC 225 (4-6-8 pole)	60x140	B5 (standard)	450/400/350
IEC 250 (4-6-8 pole)	65x140	B5 (standard)	550/500/450
IEC 280 (4-6-8 pole)	75x140	B5 (standard)	550/500/450
IEC 315 (4-6-8 pole)	80x140	B5 (standard)	660/600/550

Notes: * This type of flange requires a special shaft therefore it isn't interchangeable with the standard one. This flange increases the motor length (Q) by 25mm.
** This type of flange requires a special bearing while the shaft remains the standard one.
*** The difference between the dimension of the reduced flange and the standard one (in brackets) doesn't affect the correct motor assembly.
For 2 poles motors 225 frame size and above please contact MGM.

type of construction and mounting

The table below shows the most important types of mounting arrangements according to EN 60034-7 standard. Two systems of classification are provided: code 1 (the alpha-numeric designation) and code 2 (the numeric designation).

Horizontal shaft mountings

IM B3 IM 1001

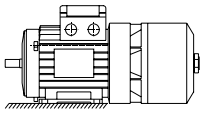

Foot mounted motor, feet down.

IM B5 IM 3001

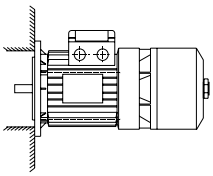

Flange mounted on D-End side.

IM B35 IM 2001

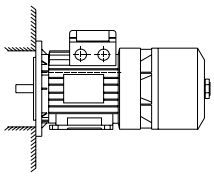

Foot and flange mounted motor.

IM B6 IM 1051

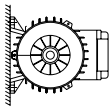

Foot mounted motor. Feet left (viewed from D-End).

IM B7 IM 1061

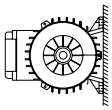

Foot mounted motor. Feet right (viewed from D-End).

IM B8 IM 1071

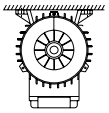

Foot mounted motor. Feet up (viewed from D-End).

IM B14 IM 3601

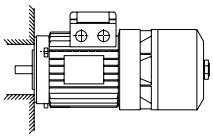

Face mounted. Flange with threa-ded holes and spigot.

IM B34 IM 2101

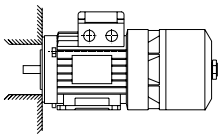

Face and foot mounted. Flange with threaded holes and spigot.

Vertical shaft mountings

IM V1 IM 3011

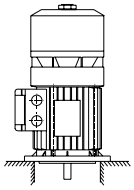

Flange mounted. Shaft down.

IM V15 IM 2011

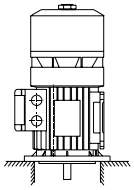

Foot and flange mounted motor. Shaft down.

IM V3 IM 3031

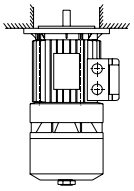

Flange mounted. Shaft up.

IM V36 IM 2031

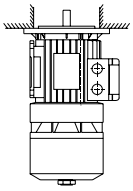

Foot and flange mounted motor. Shaft up.

IM V5 IM 1011

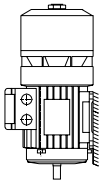

Foot mount. Shaft down.

IM V6 IM 1031

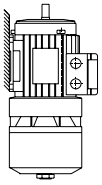

Foot mount. Shaft up.

IM V18 IM 3611

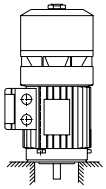

Face mount. Shaft down. Flange with threaded holes and spigot.

IM V19 IM 3631

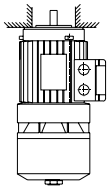

Face mount. Shaft up. Flange with threaded holes and spigot.

Notes: for information about the classifications of other types of construction and mounting please contact MGM.

enclosure rating (protection degree)

The enclosure rating of the motor has to be suitable for the environment conditions the motor operates in. According to the IEC34-5 (EN 60034-5) standard the designation of the protection degree is expressed by means of a symbol made up of two letters (IP) followed by a two digit number. The first digit indicates the protection degree provided by the motor enclosure in contact with parts in motion, electrically energized, or against the penetration of foreign bodies. The second digit indicates the protection degree of the motor enclosure against damages caused by the liquid infiltration.

IP First digit Second digit

First digit

0 No protection.

1 The machine is protected against the penetration of solid bodies greater than 50 mm in diameter (for example, protection against the accidental touch of a hand).

2 The machine is protected against the penetration of solidbodies greater than 12 mm in diameter.

3 The machine is protected against the penetration of solid bodies greater than 2.5 mm in diameter.

4 The machine is protected against the penetration of solid bodies greater than 1mm in diameter.

5 The machine is protected against the penetration of dust. The penetration is not completely avoided, but should not compromise the good functioning of the machine.

6 Dust tight machine.

Second digit

0 No protection.

1 Vertical dropping of water on the machine will not result in damaging effects.

2 Vertical dropping of water on the machine will not result in damaging effects when the machine is not inclined more than 15° from its normal position.

3 Water or rain dropping on the machine at an angle up to 60° will not result in damaging effects.

4 Water spraying on the machine from any angle will not result in damaging effects to the machine.

5 Water jets on the machine from any angle will not result in damaging effects to the machine.

6 Waves of water will not result in damaging effects to the machine.

7 Immersing the machine in water under specific conditions of pressure and time will not cause the ingress of a damaging quantity of water.

8 Immersing the machine permanently in water under conditions of pressure and time given by the manufacturer will not result in damaging effects.

MGM brake motors come with standard IP54 enclosure rating.
For use in standard industrial environments IP54 is sufficient. For outdoor applications or for application that involve contact with water, protection degree IP55 or IP56 is advisable; it's however recommended to adopt appropriate additional protections.
During installation check the proper tightening of the cable gland and, if possible, provide the cable entry with curving from bottom up. For outdoor vertical mounting with shaft down a rain roof (for BM series) and a special brake cover (for BA series) are available on request.

bearings

All MGM brake motors are equipped with double seal ball bearings. The bearings are lubricated for life with a considerable grease reserve, the seals are made of synthetic rubber resistant to oil and to wear. On MGM brake motors belonging to BAX and BMX series can be installed bearings with a “Z” shield instead of a “2RS” one.

Frame size	Bearing type	
	Drive end (D)	Non-drive end (ND)
56	6201- 2Z	6201- 2Z
63	6202 - 2RS1	6202 - 2RS1
71	6203 - 2RS1	6203 - 2RS1
80	6204 - 2RS1	6204 - 2RS1
90	6205 - 2RS1	6205 - 2RS1
100	6206 - 2RS1	6206 - 2RS1
112	6306 - 2RS1	6306 - 2RS1
132	6308 - 2RS1	6308 - 2RS1
160	6309 - 2RS1	6309 - 2RS1
180	6310 - 2RS1	6310 - 2RS1
200	6312 - 2RS1	6310 - 2RS1
225	6214 - 2RS1	6312 - 2RS1
250	6316 - 2RS1	6314 - 2RS1
280	6316 - 2RS1	6314 - 2RS1
315	6318 - 2RS*	6318 - 2RS*

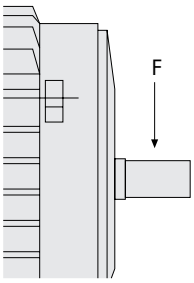

The nominal bearings lifetime is expressed in working hours reached or exceeded by 90% of the same bearings under certain test conditions.
The key parameters that affect bearings life are the load applied on the bearing, the rotation speed and the operating temperature. The values in the table are referred to the case in which there’s only radial load.
It also assumes that the radial force doesn’t change in intensity and direction. The point of force application is the center line of the shaft end (as shown) with the motor in horizontal position. Values in the table show the maximum applicable force on the shaft to obtain the duration described in the table. The force is stated in Newtons (N).

* For motors with shaft height 315, contact MGM to receive specific information according to the type of mounted bearing.

Frame size	20000 hours				40000 hours			
	2 pole	4 pole	6 pole	8 pole	2 pole	4 pole	6 pole	8 pole
56	320	410	470	520	260	320	370	410
63	410	520	600	650	330	410	470	520
71	500	630	720	800	400	500	570	630
80	660	840	950	1200	500	660	750	840
90	720	900	1000	1300	550	720	820	900
100	1000	1250	1400	1800	790	1000	1100	1250
112	1450	1850	2100	2650	1150	1450	1650	1850
132	2150	2700	3100	3950	1700	2150	2450	2700
160	2700	3400	3900	4900	2100	2700	3050	3400
180	3250	4100	4700	5980	2600	3250	3750	4100
200	4300	5450	6250	6850	3400	4300	4950	5450
225		5240	5990	6630		4150	4750	5260
250		10390	12400	13100		7950	9530	10400
280		10390	12400	13100		7950	9530	10400

The brake motors belonging to the BA series with the DC brake and all BM series motors (except those with voltage lower than 42Vdc) are equipped with a rectifier located inside the terminal box. These rectifiers can be half wave or full wave type according to the voltage supply (AC side) and to the required brake coil voltage (DC side). Rectifiers come standard with over-voltage protection devices. Rectifiers are provided with two connection options (fig. 1-diagram A and B) for fast and slow brake reaction time. Rectifiers can be provided in C type (integrated in the terminal box cover-fig. 2), Q type (with loose wires-fig. 3), or M type (with clamp terminals-fig. 4). The rectifier resin colour identifies the rectifier rated voltage as indicated in the table below.

Resin colour	Applicable voltage (V_{ac})	Output voltage (V_{dc})	Standard values ($V_{ac} \rightarrow V_{dc}$)
Blue	200-265	$0.45*V_{ac}$	230→103
Yellow	360-440	$0.45*V_{ac}$	400→180
Green	90-130	$0.9*V_{ac}$	110→100

V_{ac} refers to the input AC (rms value) voltage while V_{dc} refers to the mean value of the output DC voltage.

The following models are also available upon request:

Model R
This type of rectifier is recommended when a faster brake engaging time is required and if an external contact on the DC circuit isn't available. A relay, integrated in the rectifier circuit, allows in an independent way to open the circuit on the DC side.

Model P
This type of rectifier is recommended when a fast brake release and/or a higher braking torque is needed. This rectifier is designed in such a way to provide initially twice the rated output voltage allowing the brake coil to quickly attract the moving element.

fig. 1

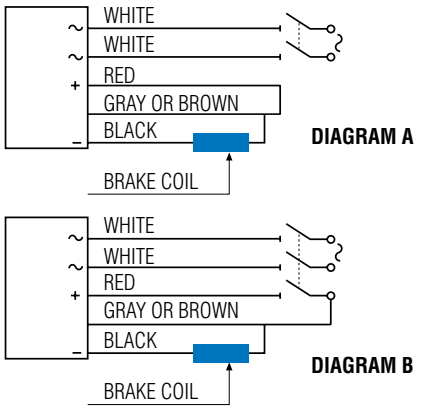

fig. 2

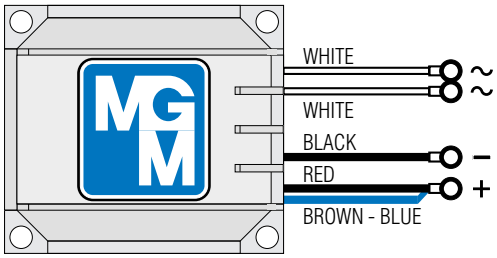

fig. 3

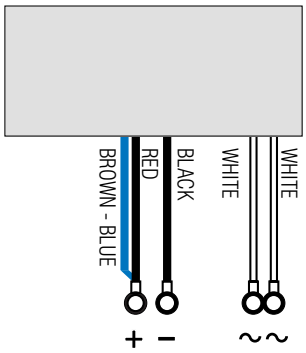

fig. 4

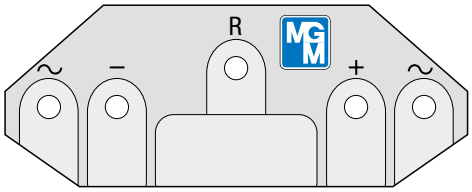

The Electromagnetic compatibility requirements (standard EN 60034-1) apply to motors that are supplied directly to the end-user (for DC brakes, depending on the type of the rectifier installed, an additional optional EMC filter could be required).For more information please contact us. The motor is usually a component that is incorporated into a machine or system on which the EMC behavior depends, consequently the solutions adopted they must be considered as a whole. According to the provisions of the EN 60034-1 standard, motors intended to be incorporated as components in a machinery whose enclosure and final assembly affect EMC emissions are subject to EMC regulations relating to the final product. The machine manufacturer is responsible for compliance with the EMC directive 2014/30 / EU.

motor voltage and frequency supply

MGM motors are provided with a standard voltage rating of 230/400V±10% 50 Hz (IEC 60038) "European voltage". On request they can be provided with different operating voltages. The operating voltages at 50Hz and 60Hz are clearly indicated on the motor nameplate (see motor nameplate section). MGM motors are suitable to work within a voltage variation of 10% on the nameplate voltage. The available rated voltages are shown in the table below under "Nameplate voltage" at 50 Hz and 60 Hz, while the corresponding voltages on which the motor is able to run are shown under "Usable voltage". Only the most commonly required voltages are present, different voltages are available. For more information contact MGM.

Series	Nameplate voltage		Usable voltage	
	50 Hz	60 Hz	50 Hz	60 Hz
BAX-BMX (IE2/IE3)	230 / 400	265 / 460	220 / 380 240/415	254 / 440 277 / 480
	200 / 400*	230 / 460*	190 / 380	220 / 440
	190 / 330	220 / 380	200 / 346	208 / 360 230 / 400
	240 / 415	265 / 460 (IE2)**	230 / 400	277 / 480
	290 / 500	330 / 575	303 / 525	320 / 550 346 / 600
	400	460	380 415	440 480
BA-BM	230 / 400	277 / 480	220 / 380 240/415	265 / 460
	190 / 330	220 / 380	200 / 346	208 / 360 230 / 400
	208 / 360	254 / 440	200 / 346	240 / 415
	290 / 500	330 / 575	303 / 525	320 / 550 346 / 600
	400	480	380 415	440 460

*9 wires winding - ** For IE3 efficiency class motors contact MGM

It's important to understand the torque vs. RPM curves for different voltages supplied to the motor (on the side) particularly for those motors running under heavy duty. If you are supplying the brake with a lower voltage than the nominal one, the air gap has to be adjusted more frequently than in the case of nominal voltage supply in order to guarantee a constant high brake performance.

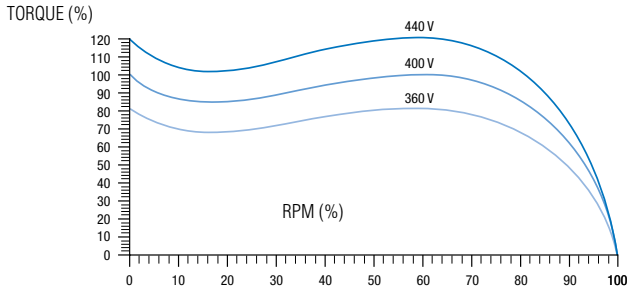

Operating at 60Hz

MGM motors with rated voltage of 230/400V 50Hz maintain the same rated and starting torque if operating at 277/480V 60Hz (or 265/460V 60Hz), while the RPM increases by about 20% (see torque vs. RPM curves 1 and 2 here below). The AC brake coil on the BA (X) series works equally well if operating either at 230/400V 50Hz or at 277/480V 60Hz (or 265/460V 60Hz). The DC brake coil with nameplate voltage of 110V, 230V or 400V on the BM and BA series has to be supplied at 110V, 230V or 400V single phase respectively both at 50 Hz or 60 Hz (i.e. a 230V brake can be supplied single-phase at 230V 50Hz or at 230V 60 Hz).
MGM is able to provide motors and brake coils suitable for operating on 220/380V 60Hz power supply. It is not advisable to run motors designed for 230/400V 50Hz and and 277/480V 60Hz (or 265/460V 60Hz) on 220/380V 60Hz voltage supply, as the power remains the same, but the starting torque is reduced by 35% (see curves 1 and 3 here below). MGM strongly recommends not to use a 277/480V 60Hz (230/400V 50Hz) AC brake coil on 220/380V 60Hz power system as it results in a significant loss of performance.
DC brakes with a rated voltage of 230V 50Hz can be used on 220V 60Hz, and those with a rated voltage of 400V 50Hz on 380V 60Hz power system. The diagram below shows different curves (torque vs. RPM) for a 230/400V 50Hz (277/480 60Hz) rated voltage motor running on different power systems.

1. 230/400V 50Hz (277/480V 60Hz) rated voltage motor running on 230/400V 50 Hz power system.
2. 230/400V 50Hz (277/480V 60Hz) rated voltage motor running on 277/480V 60 Hz power system.
3. 230/400V 50Hz (277/480V 60Hz) rated voltage motor running on 220/380V 60Hz power system.

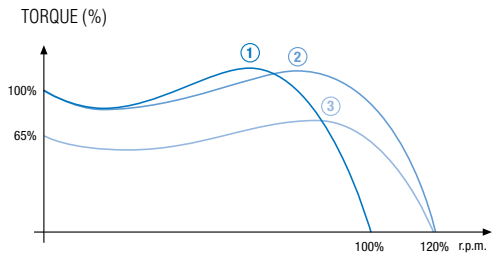

It's important to point out that, if running the motor at 60Hz instead of 50 Hz, the maximum number of starts reduces by about 15-20%, and the noise level increases by about 3dB due to the increased speed of the cooling fan.

The most common duty types are described in this paragraph and a method to calculate the permissible power rise-up is given. Please contact MGM for different types of duty.

Continuous duty S1

The motor operates with constant load for a period of time sufficient to achieve the thermal equilibrium.

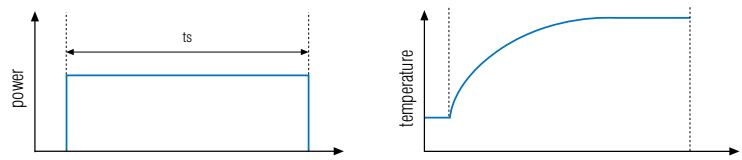

Limited length duty S2

The motor operates with constant load for a limited period of time not sufficient to achieve a thermal equilibrium. The remaining period of the cycle is a rest period, during which the motor cools down to the ambient temperature again.

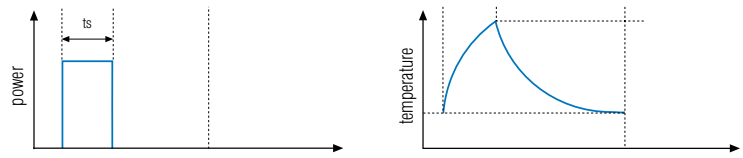

Periodic intermittent duty S3

The motors follows a cycle including an operation period with constant load (ts) and a rest period (tr). The synthetic indication of the duty is given by the intermittent percentage ratio related to a period of time, which usually is 60 min. (f.e. 15% - 60 min.)

$$\text{Intermittence ratio} = \frac{ts}{ts + tr} \bullet 100\%$$

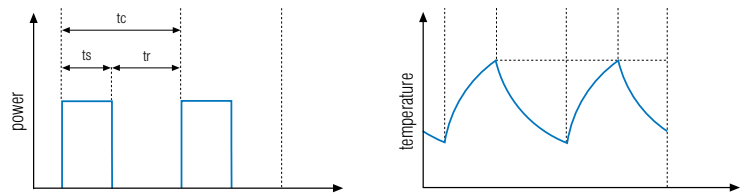

Periodic intermittent duty with starting S4

The motor operates on identical cycles, significant start-up time (ta) and a period with a constant load (ts). In the residual cycle time, the motor is under rest conditions (tr). Intermittent duty means that no thermal equilibrium is reached during the operating part of the cycle.

The proper indication for this cycle is S4 followed by the intermittent duty ratio, by the motor moment of inertia (J_M) and by the load moment of inertia (J_{ext}), with the latter two referred to the motor shaft. S4 Intermittent duty power temperature.

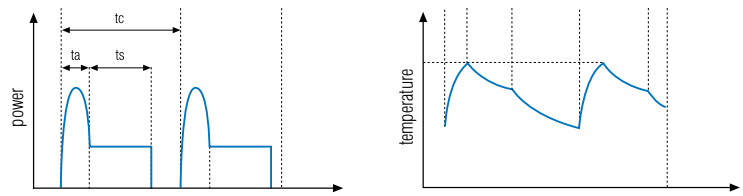

Example: S4 25 % J_M = 0.15 kgm^2 J_{ext} = 0.7 kgm^2

Intermittent duty ratio = (ta + ts) / tc

In case of limited length duty (S2) or periodic intermittent duty (S3) an increase in power is obtainable, compared to that achieved in a continous duty due to the reduced effects of motor warming; starting torque remains unchanged. As an indication for the single speed motors you can use the following formula:

Available Power = K • Rated power

Where "K" is a coefficient obtainable from the diagrams on the right side.

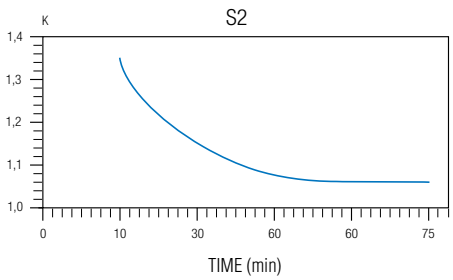

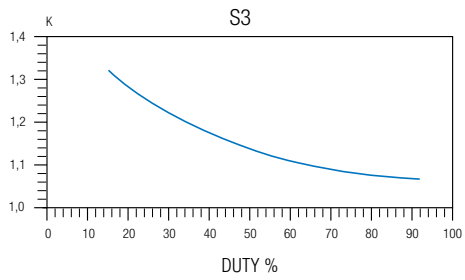

MGM motor running on inverter

All MGM motors are designed to be suitable for inverter duty. See below to understand the motor operating under inverter control.

The motor speed depends on the power supply frequency. Basically the inverter works converting the power input from the line with a fixed amplitude and frequency (f.e. 400V 50Hz) into a voltage supply with a variable amplitude and frequency suitable to control the motor speed. Inverter can't generate an output voltage higher than the input voltage while it can increase the frequency above the input rated value; "Constant torque" regulation range indicates a range where the inverter is able to keep the nominal ratio of voltage to frequency constant; in our diagram this range is up to 50 Hz. "Constant power" (or flow) regulation range means a range where the inverter can increase frequency (and so the motor rotation speed), without voltage increase to the motor (and consequently the torque); in our diagram this range exceeds 50 Hz; Operating diagram shows the percent values of the torque available both in continuous and overloading running. When the motor is running within "constant torque" range (frequency below 50Hz), it is necessary to check that continuous running at low speed does not cause overheating.
In fact, the reduced self cooling of a motor running at low speed may cause a rise in the windings temperatures up to dangerous values for their integrity. In such situations it is recommended the use of motors with forced ventilation (-SV / -AV series). It is also advisable to use the temperature sensors to detect the temperature. When the motor is running within "constant power" range (frequency above 50 Hz), it is necessary to check if the torque required by the load does not exceed the torque indicated on the operating diagram, otherwise malfunction and eventual intervention of inverter overload protection devices could occur.
It is possible to extend the constant torque range up to 87Hz (104Hz for 60Hz environments) by connecting the motor in Delta rather than in Star (e.g., with inverter supply 400V 50Hz and motor 230/400V 50Hz).
When connected in this way the motor can deliver up to 1.7 times the rated power and as a consequence the Inverter (Variable Frequency Drive) has to be sized to provide an higher current than rated. The primary benefit of this solution is that the motor extends its constant torque range and the motor can provide the rated torque up to 1.7 times the motor RPM.

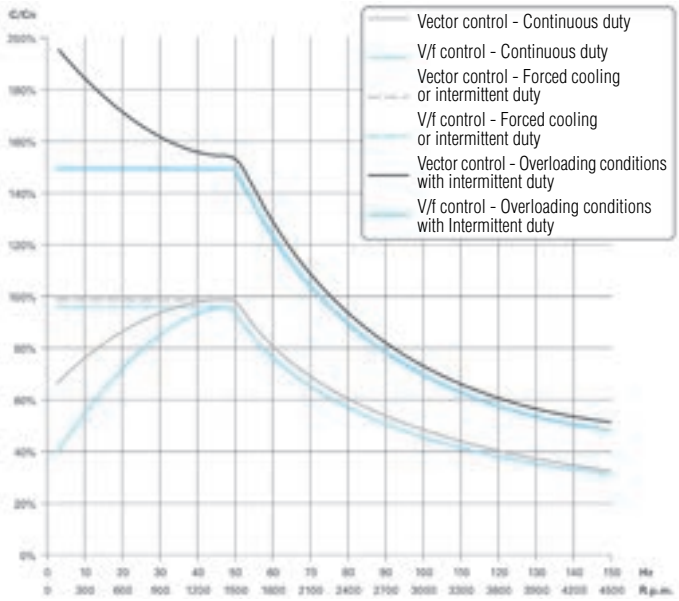

The brake should be supplied separately from the motor on brake motors controlled by inverters, to ensure the correct operation of the brake coil. In this case the double terminal board box option must be requested. On brake motors with AC brake coil, it is also advisable to use a safety overload cutout (MGM type RC04) on the power supply of the brake coil.

The starting torque of a motor running on inverter is different from the one of a motor connected directly on line. Be sure to select an inverter with technical specifications suitable for the work load of the machine it is intended to be used on.

An inverter leads to a non-sinusoidal supply waveform. Because of undesirable harmonic components added to the underlying power supply, a motor controlled by an inverter has higher losses, and an increased vibration and noise level. The efficiency reduction varies according to the type of inverter used.

Please contact MGM technical staff when using inverters with power supply higher than 400V or when using long cables between the motor and the inverter as both situations can be critical for the motor winding insulation system. In these cases the option "Winding with reinforced insulation" is suggested.

The interference generated by electronic power devices such as inverters, can influence equipment sensitive to interference, such as computers, load cells, photocells, temperature regulators, magnetic intrusion switches or capacitance grounding circuits, etc. The disturbances generated by the inverters propagate via the motor supply cables, the inverter supply cables, the grounding circuit, the control wires. Whenever it is necessary to reduce the interference caused by the inverter the following practical suggestions should be implemented. Disturbances are highest nearby the inverter and can be attenuated by increasing the distance. Sensitive devices should be kept at least 50cm from frequency converter devices. The power wiring should be kept at least 50cm away from the control wiring. Use power cables as short as possible. Power cables longer than 10m are a strong source of disturbances and can cause malfunctions. Verify the necessity of mounting an appropriate filter on the power supply line.

Balancing

MGM brake motors are dynamically balanced with half a key inserted in the shaft keyway. The table below provides the vibration limits for the different frame sizes as set forth in EN60034-14. As standard, motors are supplied with normal class balancing (class A), upon request with class B.

Vibration grade	Shaft height (mm)	56 ≤ H ≤ 132		H > 132	
	Mounting	Displacement µm	Velocity mm/s	Displacement µm	Velocity mm/s
A	Free suspension	45	2.8	45	2.8
	Rigid mounting	-	-	37	2.3 2.8*
B	Free suspension	18	1.1	29	1.8
	Rigid mounting	-	-	24	1.5 1.8*

* Please refer to the standard EN 60034-14 or contact MGM for further details.

Reducing vibrations is important both to avoid motor damage, especially to the bearings, and to avoid damage to the machinery the motor is coupled to. It is advisable to balance the parts of the attached machinery (coupling, pulleys etc.) in order to avoid vibrations.

Noise

The noise of a running electric motor is mainly generated by the magnetic field, from the bearings and from the cooling system. The most relevant noise is generated by the cooling fan. Technical data sheets report the values of the sound pressure in dB(A) according to ISO 1680. The values are referred to a 50Hz functioning. These values should be increased by 3÷5 dB about on motors operating at 60Hz due to the higher rotation speed and therefore of the fan. If motors are driven by an inverter its supply is not purely sinusoidal with higher levels of vibrations and motor noise. On request it is possible to provide motors with low noise level. During the braking action, the noise level depends on the air gap (i.e. the distance between the brake coil and the brake moving element). A periodic air gap adjustment provides lower noise levels.

Manual brake release and shaft rotation

Manual brake release might be needed to perform maintenance on the machine where the motor is installed or to manually operate the machines in case of power supply failure.

BA Series motors are equipped with a central screw to manually release the brake (for the BAH series motors there are 2 side screws). This is a 'locking' type brake release so that the brake stays disengaged until the screw is tightened on the brake assembly. Upon request the brake can be provided with a non-locking mechanism (fulcrum style).

BA SERIES

On BM Series motors the hand release (non-locking type) is supplied on request and it's a side lever to manually release the brake. The lever is mounted on the same side as the terminal box, unless otherwise requested.

BM SERIES

BA and BM series motors up to frame size 132mm (NEMA 245) come equipped with a hex socket on the non-drive end to manually rotate the shaft with a hex wrench once the brake is disengaged. This standard feature (MGM patent) is very useful for all those applications requiring manual positioning or a machine reset. Most of the times this feature prevents the use of a special double shaft extension needed for manual rotation. Upon request it's also possible to have motors equipped with this hex socket on frame sizes 160 and over (IEC 160 to 315).

Safety warning: when the brake is manually released the motor shaft is no longer braked therefore is free to rotate. For this reason the manual brake release must be operated only when there are no safety concerns for any applied or suspended load. Brake must be always properly reengaged once the manual intervention is completed. Motors shall never be started with any tool inserted in the motor hex socket. Such tools must be properly removed after any manual intervention. Failure to heed these warnings could lead to serious injury and/or damage.

temperature, altitude, humidity

The standard electrical specifications of the motors are referred to continuous duty (S1), nominal voltage, nominal frequency (50 to 60 Hz), an ambient temperature of max 40 °C and installation elevation up to 1000 m. above sea level. If ambient temperature is higher than 40 °C the permissible output power should be reduced by a percentage of the rated value (see the table below).

Ambient Temperature	40° C	45° C	50° C	55° C	60° C
Permissible Output Power as % of the Rated Power	100%	96.5%	93%	90%	86.5%

If ambient temperature is higher than 60 °C or lower than -30 °C please contact the MGM technical office. If the motor is going to work at an altitude of more than 1000 m. above sea level, the permissible output power should be reduced by percentage of the rated value (see the table below).

Altitude above sea level	1000 m.	1500 m.	2000 m.	2500 m.	3000 m.	3500 m.	4000 m.
Permissible Output Power as % of the Rated Power	100%	97%	94.5%	92%	89%	86.5%	83.5%

Motors working in low temperature or high moisture environments

If a motor has to be used in an environment where the temperature is lower than -15 °C, in high moisture or where abrupt temperature changes can occur, it is advisable to use anti-condensation heaters. This recommendation is particularly important where there are long pauses between working cycles, which may cause abundant condensation on the motor windings. It could permeate the windings and cause short circuits. This occurs mostly on larger motors, which contain more air volume inside, allowing more humidity to condense. Two anti-condensation heaters are fitted on the windings heads in order to increase the internal motor temperature as to prevent the air condensation.
Three different types of heaters are used according to the motor size. The wiring leads of the heaters are connected to the terminal board located in the terminal box. The presence of anti-condensation heaters is shown by the writing “SCALD” followed by the required supply voltage in the field 29 of the nameplate (according to nameplate paragraph). Space heaters must be supplied to prevent moisture condensation in the motor during times the motor is not running. The heaters must not be supplied during the normal motor operation.

Additional protection against moisture may be provided by the realization of drain holes on the motor to allow water drainage. Drain holes option is provided on request only and it is necessary to specify in the order the mounting to properly position the holes on the motor.

As standard MGM motors have the stator winding and brake coil treated to work in tropical environments. However a specific tropicalization treatment can be requested, for all motors that have to be installed in high humidity environments.

For the BM series a rain roof is available on request, for outdoor use or in presence of water jets with vertical mounting and shaft down. The rain roof is positioned above the fan cover protecting the motor from water and permitting the regular flow of the cooling air. There is no need of a rain roof on BA motors thanks to its particular construction and the use of a special brake cover for outdoor vertical mounting. When brake motors are used in elevated moisture environments or where there are long periods between working cycles, brake disc sticking can occur. To avoid disc sticking it is possible to provide zinc plated or stainless steel brake friction surfaces according to the motor type.

The motor should be provided with protection devices to protect against non ordinary working conditions. The use of protection device on the line is particularly advisable (i.e. varistors) for those motors running at low speed (8, 12, 16 poles) to prevent early wear of windings and of contacts caused by voltage peaks during the switching on. It is advisable to use proper torque limiters in those application where the motor shaft could be impeded. The chart below reports the most effective protection devices for the most frequent occurring problems.

Operation conditions	Protection type		
	Fuses	Protective circuit breakers	Thermal protective device on the windings
Excess currents 200% In	no protection	excellent protection	excellent protection
Heavy starts, reversing operation	no protection	partial protection	excellent protection
Stalling	partial protection	partial protection	partial protection
Starting on two phases	no protection	partial protection	excellent protection
Voltage deviations	no protection	excellent protection	excellent protection
Frequency deviations	no protection	excellent protection	excellent protection
Insufficient motor cooling	no protection	no protection	excellent protection

On request MGM is able to supply motors equipped with:

Bimetallic Thermal Protectors (PTO): three bimetallic sensors in series with normally closed contacts, fitted on the windings heads. They control a switch (not provided with the motor) that interrupts the power supply when getting close to a dangerous temperature. The nominal voltage and current are 250 V and 2,5 A AC. The contact closes again with a temperature reduction of at least 35 °C. The bimetallic thermal protectors leads are connected to a terminal board located in the main terminal box.
The temperature of intervention of the sensors is 140° C. Different temperatures of intervention are avaible on request.

Thermistors (PTC): three thermistors in series (conforming to DIN standards 44081 and 44802), fitted on the windings heads. The resistance of the thermistors changes with temperature and when getting close to the nominal intervention temperature the sharp increase of resistance guarantees a precise intervention of the safety devices. The thermistor only senses the temperature so a cut-out device (not provided with the motor) must be added to interrupt the power supply to the motor. The maximum PTC operating voltage is 30 V DC. The PTC leads are connected to a terminal board located in the main terminal box.
The temperature of intervention of the the sensors is 130° C. Different temperatures of intervention are avaible on request.

PT 100 sensors: sensors (conforming to DIN EN 70751) fitted on windings heads. The resistance of PT 100 sensors linearly changes with temperature.

Over-voltage protection

Brake coil: DC brake coil is supplied as standard with a rectifier fitted with an over-voltage protection device. The AC brake coil doesn't generally need this type of protection devices. In case of a very high start/stop frequency or in case of critical line voltage situation it is recommended the use of RC04 filter in order to limit the electrical stress on the brake coil.

Low speed motors: when starting motors with a high number of poles (i.e. 8, 12, 16), voltage peaks can be generated damaging the motor insulation materials and contacts. In these cases it is advisable to install safety over-voltage protection devices. On request MGM provides over-voltage protection devices such as RC04 for motors up to 4 kW and RC10 for motors up to 10 kW. Please note that these devices should not be installed if the motor is controlled by an inverter.

Brake monitoring system: The monitoring devices of the brake group allow you to check the status and necessary maintenance activities by checking the status of the brake (ON / OFF) and wear of the friction linings. The different options are: Microswitch to check the wear of the brake disc friction lining and / or to check the position of the brake moving element. They are mechanical switches with Normally Open (NO) or Normally Closed (NC) contacts that change their state when the brake wearing reaches critical levels and / or changes in the position of the moving element (free or locked motor rotation). They require for monitoring only one electrical connection (AC or DC). They are available for the BA and BM series starting from axis height 63. Inductive sensors: provide more information than mechanical sensors. They can have a digital or analog output. Are available on request with a special safety classification (SIL2 or SIL3). They are larger in size than mechanical switches and require DC power supply. They are available starting from axis height 90 for the BA and BM series. They can be supplied together with the Intelligent System of integrated brake monitoring (SMF) that allows you to know a lot of information regarding the state of the brake, the state of the sensors, the cycles of braking, with a simple connection. The controls allow you to continuously determine the position of the brake moving element and therefore to monitor the variation of the air gap, the wear of the brake disc and the position of the moving elemnt. Other quantities, such as temperature can be added. This system, easily interfaced, allows you to organize and drive a more efficient and effective one even remotely maintenance.

efficiency

Efficiency indicates how well an electric motor transforms electrical energy into mechanical energy. The higher the efficiency of a motor in specific operating conditions, the lower is its energy consumption.
International standard IEC 60034-30-1 defines efficiency classes through the code "IE" followed by a number.

IE1 (standard efficiency)
IE2 (high efficiency)
IE3 (premium efficiency)
IE4 (super premium efficiency)

The Standard IEC 60034-30-1 defines motor efficiency classes, but it doesn't legally determine minimum efficiency requirements. As a matter of fact the standard does not specify if motors shall comply with a minimum efficiency class. Minimum efficiency standard are instead specified by individual countries laws.

The new European regulation (regulation EU 2019/1781), it establishes new requirements for brake motors rated for operation on a 50 Hz, 60 Hz or 50/60 Hz sinusoidal voltage, rated voltage above 50 V and up to and including 1000 V and continuous duty (S1, S3 ≥ 80%, S6 ≥ 80%) operation, starting from the 1st of July 2021.

Starting from the 1st of July 2021:
- three phase brake motors with rated power 0.75 kW ≤ P_N ≤ 1000 kW with 2, 4, 6, 8 pole, must be IE3.
- three phase brake motors with rated power 0.12 kW ≤ P_N < 0.75 kW with 2, 4, 6, 8 pole, must be IE2.

Starting from the 1st of July 2023:
- single phase brake motors with rated power P_N ≥ 0.12 kW with 2, 4, 6, 8 pole, must be IE2.

The new regulation doesn't apply to some types of motors among which 2 speed motors and TENV motors.

BAX and BMX series motors (three phase brake motors) with efficiency class IE2 (rated power P_N < 0.75 kW) and IE3 (rated power P_N ≥ 0.75 kW) comply with the new efficiency regulation. As for the brake assembly, the BAX and BMX series maintain the same technical characteritics of the corresponding motor of the BA and BM series.

Motor Efficiency regulations are different for each country in the world with regards to minimum efficiency levels, exclusions and deadlines. As regulations are subject to changes please contact MGM for the most updated information about efficiency regulations.

For a quick calculation of the annual economic savings using a motor with an efficiency (eff_a) instead of a motor with an efficiency (eff_b) with the same rated power you can consider the following formula:

Annual economic savings = H_{year} x kW x %FL x Costkwh x ($1/eff_a$ -$1/eff_b$)

H_{year} = annual motor running (hours)
kW = motor rated power (kW)
% FL = fraction of full load power at which motors effectively run
Costkwh = electricity cost
eff_a = motor 'a' efficiency (%) at the effective load condition / 100
eff_b = motor 'b' efficiency (%) at the effective load condition / 100

100% of manufactured motors undergo a final routine test and safety checks (dielectric rigidity and the insulation resistance test) as well as a no load test. Upon request, at the purchase order time, motors can be provided with the relevant **MGM routine test certificate**. The certificate reports the motor serial number and the routine test results.

The following documents can also be provided on request:

Type Test Certificate: this certificate represents the tests carried out on prototypes or on samples from production. It reports data concerning the type of motor therefore it doesn't report specific motor information. It provides the data from the motor at "no load" and at "load" as well as the electrical safety tests. The motor serial number isn't provided in such a certificate.

Test Certificate: this certificate represents the tests carried out on a specific motor. It provides the data from the motor at "no load" and at "load" as well as the electrical safety tests. This time the motor serial number is provided in such a certificate.

Additional tests such as noise, vibration, brake torque, dimensions and protection degree (enclosure) rating can provided by MGM upon request at the time of the purchase order. Please contact MGM to be quoted concerning the above tests and certificates.

Painting

The table below shows the available painting plans. MGM primarily chooses water-based paint rather than solvent-based ones in order to minimize the environmental pollution impact. Unless otherwise specified or required by the application, aluminium parts are provided unpainted.

Painting plans	Notes	Intended use
Standard	All cast iron parts are painted with water-based paint. Brake cover is powder coated both internally and externally. Aluminium parts are left unpainted. Body, flanges and end-bells of motors from frame size IEC 160 and over are made of cast iron, and painted externally with water-base epoxy paint. The MGM standard colour is RAL 5010.	Industrial environments, no harsh chemicals and protected from the weather.
Outdoor	One epoxy primer coating and one coating of enamel.	Industrial environments with high humidity levels, no harsh chemicals, outdoor installations exposed to the weather (not in proximity to coastal areas) with moderate pollution.
Marine	Two coatings of epoxy primer and one coating of enamel.	Industrial environments with high humidity, moderate environmental contamination, outdoor installations exposed to weather, coastal areas with moderate salinity (not offshore).
Offshore	One coating of epoxy primer, two coating of epoxy paint, one coating of enamel.	Installations on vessels/ships or offshore units.

Upon requests, painting plans can be applied according to corrosion classes (C3, C5-M, etc.) as set forth in the ISO 12944 standard (Paints & Varnishes - Corrosion protection of steel structures by protective paint systems).

On request an additional corrosion protection on the internal parts like rotor, casing, stator, etc. can be provided (stated as 'VER-INT') and, still on request, a winding tropicalization treatment can be applied ('TROP').

Painting plan and colour RAL number shall be specified at the time of the purchase order. Make sure that the protection (enclosure) rating is suitable for the intended installation and evaluate if the application requires drain holes and/or anti-condensation heaters.

Components materials and dimensions

Motor IEC size [B5/Shaft]	Standard shaft dimens. D-side [mm]	Available IM	Flanges dimensions [mm] P / M / N	Flanges and shields material (item 36-37-4)	Stator frame material (item 7)	Terminal Box Position (B3 execution)	Brake Cover material (item 26 or 48)	Encoder side shaft diameter (standard, different dimension on request)
56	9x20	B3	-	Aluminium	Aluminium	On Top	Steel	According to request
		B5	120/100/80					
		B14	80/65/50					
63	11x23	B3	-	Aluminium	Aluminium	On Top	Steel	According to request
		B5	140/115/95					
		B14	90/75/60					
		B14-R	90/65/50					
71	14x30	B3	-	Aluminium	Aluminium	On Top	Steel	10X20 mm
		B5	160/130/110					
		B5-R	120/100/80*	Cast iron				
		B5-R/M	140/115/95*					
		B5-M	200/165/130					
		B14	105/85/70	Aluminium				
		B14-R	105/75/60					
80	19x40	B3	-	Aluminium	Series BA-BM Aluminium	Series BA-BM On Top (On side on request)	Series BA-BM Steel	10x20 mm
		B5	200/165/130	Aluminium (Cast iron for BAG-BMG motors)				
		B5-R***	160/130/110	Cast iron	Series BMG Cast iron	Series BAG-BMG On side (On top on request)	Series BAH Aluminium	
		B14	120/100/80	Aluminium				
		B14-R	120/85/70					
90	24x50	B3	-	Aluminium (Cast iron for BAG-BMG motors)	Series BA-BM Aluminium	Series BA-BM On Top (On side on request)	Series BA-BM Steel	15x20 mm
		B5	200/165/130					
		B5-R	160/130/110	Cast iron	Series BMG Cast iron	Series BAG-BMG On side (On top on request)	Series BAH Aluminium	
		B14	140/115/95	Aluminium				
		B14-R	140/100/80					
100	28x60	B3	-	Aluminium	Series BA-BM Aluminium	Series BA-BM On Top (On side on request)	Series BA-BM Steel	15x20 mm
		B5 standard bearing 6206_2RS1	250/215/180	Cast iron				
		B5 Special bearing 6006-2RS1	200/165/130***		Series BAG-BMG Cast iron	Series BAG-BMG On side (On top on request)	Series BAH Aluminium	
		B14	160/130/110					
112	28x60	B3	-	Cast iron	Series BA-BM Aluminium	Series BA-BM On Top (On side on request)	Series BA-BM Steel	15x20 mm
		B5	250/215/180					
		B14	160/130/110		Series BAG-BMG Cast iron	Series BAG-BMG On side (On top on request)	Series BAH Aluminium	

Components materials and dimensions

Motor IEC size [B5/Shaft]	Standard shaft dimens. D-side [mm]	Available IM	Flanges dimensions [mm] P / M / N	Flanges and shields material (item 36-37-4)	Stator frame material (item 7)	Terminal Box Position (B3 execution)	Brake Cover material (item 26 or 48)	Encoder side shaft diameter (standard, different dimension on request)
132	38x80	B3	-	Cast iron	Series BA-BM Aluminium Series BAG-BMG Cast iron	Series BA-BM On Top Series BAG-BMG On side (On top on request)	Series BA-BM Steel Series BAH Cast iron	15x20 (mm)
		B5	300/265/230					
		B5-R	250/215/180					
		B14	200/165/130					
		B14-R	200/130/110					
160	42x110	B3	-	Cast iron	Series BA Cast iron Series BAA Aluminium (only B5)	On side (On top on request)	Series BA-BM Steel Series BAH Cast iron	15x20 (mm)
		B5	350/300/250					
		B5-R	300/265/230					
180	48x110	B3	-	Cast iron	Series BA Cast iron Series BAA Aluminium (only B5)	On side (On top on request)	Series BA-BM Steel Series BAH Cast iron	According to request
		B5	350/300/250					
200	55x110	B3	-	Cast iron	Series BA Cast iron Series BAA Aluminium (only B5)	Series BA On side (On top on request)	Series BA-BM Steel Series BAH Cast iron	According to request
		B5	400/350/300					
225	60x140 (4/6/8p) 55x110 (2p)	B3	-	Cast iron	Cast iron	On side (On top on request)	Series BM Steel Series BAH Cast iron	According to request
		B5	450/400/350					
250	60x140 (4/6/8p) 60x140 (2p)	B3	-	Cast iron	Cast iron	On side (On top on request)	Series BM Steel Series BAH Cast iron	According to request
		B5	550/500/450					
280	75x140 (4/6/8p) 65x140 (2p)	B3	-	Cast iron	Cast iron	On side (On top on request)	Series BM Steel Series BAH Cast iron	According to request
		B5	550/500/450					
315	80x170 (4/6/8p) 65x140 (2p)	B3	-	Cast iron	Cast iron	On side (On top on request)	Series BM Steel Series BAH Cast iron	According to request
		B5	660/600/550					

*. This type of flange needs a special shaft on drawing and so it's NOT interchangeable with the others BUT only between them (B5-R vs B5-R/M and vice versa). The total length of the motor (Q) with this type of flange increases of 25 mm

**. This type of flange needs a special bearing; the shaft is the standard one.

***. For all IEC80 excluded the 80D

On request it's possible to supply the cast iron components in ductile cast iron.

B5

B14

B3

BA-BAX Series

BA series consists of three phase, asynchronous brake motors. The brake is activated in case of power supply failure. The brake torque remains the same in both directions of rotation and the motor brakes without shaft axial sliding. As standard the brake is AC 3-phase voltage supply with brake leads connected with motor leads in a single terminal board box, while on request, it is possible to supply the brake separately with a second terminal board or to have a DC brake supply with a built-in rectifier fitted inside the terminal box. The rectifier is provided with over-voltage protection devices.In the technical data tables, the BA series motors are proposed in the BAX version for continuous duty with IE2 / IE3 efficiency class (compliant with EU regulation 2019/1781), alternatively they can be supplied in the BA 'Enhanced version Power 'only for intermittent service (S3 60%).
BA series motors tolerate high overloading rates and are capable of withstanding overheating in such a way that guarantees the best reliability even under tough operating conditions. All MGM series motors have been designed to be controlled by inverters. The motor winding insulation is class F, while class H is available on request. Motor construction type is totally enclosed externally cooled (TEFC) and IP54 enclosure (IP55 on request). For higher protection degree (IP56-IP65-IP66) we recommend to use the BAH version (see page 56 for more info). Motors up to 132 frame size are fitted as standard with a hexagonal hole on the shaft at the non drive end to allow manual rotation, even if power is off. All BA series motors are provided as standard with hand brake release screw.
BA series brake disc has a large lining surface that allows high brake torque, low disc wear and consequently low maintenance cost. The brake torque can be easily adjusted to the desired value just by screwing some nuts. Thanks to its special construction the brake friction surface is self-ventilated on the motor side, permitting a high brake workload and keeping brake time constant. The brake lining material is asbestos free.
BA series motor frame is made of die cast, light metal on motors up to 132 size and the terminal board box, provided with cable glands and plugs, is positioned 180° above the motor support feet. The frame is made of cast iron starting from 160 frame size and the terminal box is located on the right side (drive-end view). Shields and flanges are made of aluminium on motors up to 90 frame size, and of cast iron on motors of 100 frame size and above. The brake moving element and the brake coil have a laminated nucleus to reduce electrical losses and to secure a very quick brake intervention.
BA series main features are its sturdy construction, quick braking action, constant braking time, high number of permissible start/stop cycles also under severe applications, easily adjustable brake torque, low maintenance costs.

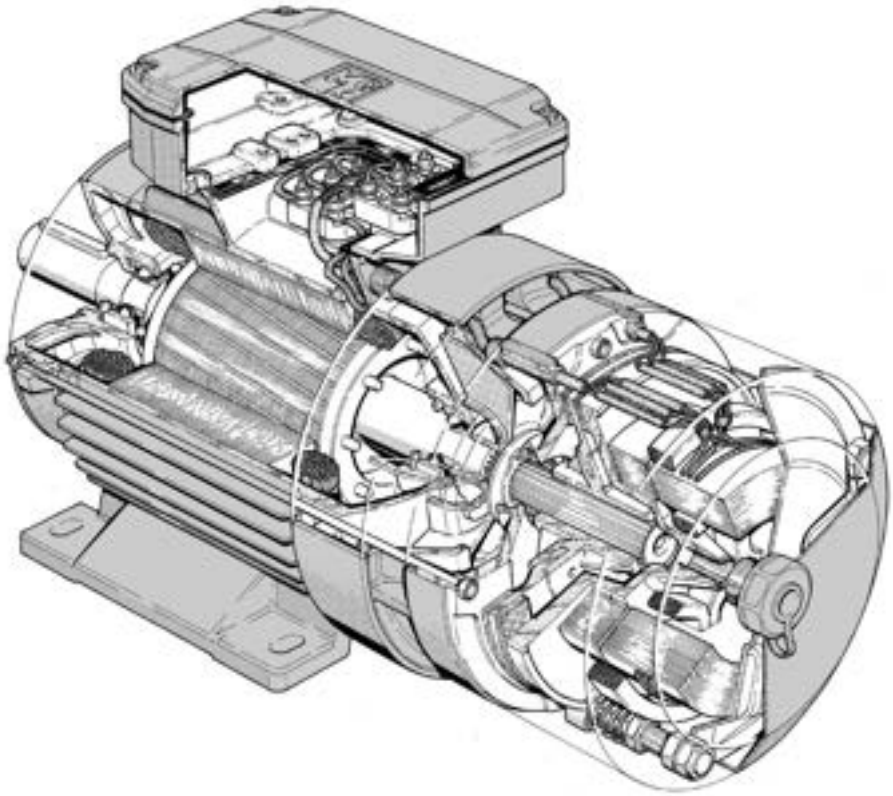

BA-BAX brake assembly

Air gap adjustment

The air gap (60), that is the distance between the two magnetic cores, the brake coil (25) and brake moving element (24), must stay within the value expressed in the chart below. It is not advisable to exceed the expressed value, in order to avoid vibrations of the brake moving element, very loud noise, the brake coil burning or even the whole brake assembly failure. It is advisable to check periodically the air gap because it increases as a consequence of the brake disc wear. In order to set the air gap to the indicated value, loosen the nuts (21-22) so to move the brake coil (25) towards the brake moving element (24). Once this operation has been settled be sure to tighten the locknuts. The above mentioned procedure isn't valid for BA 250-280 serie-motors, for which we please you to contact us.

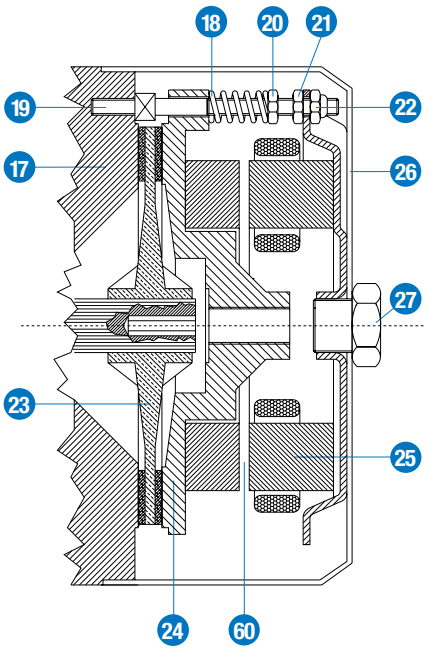

Frame Size	71-80	90-100	112-132	160÷200	225÷315
Min Air Gap [mm]	0.25	0.3	0.35	0.45	0.5
Max Air Gap [mm]	0.6	0.7	0.8	1.0	1.1

Brake torque adjustment

The brake torque is proportional to the springs (18) compression, which can be adjusted tightening or loosening the locknuts (20). The compression of the three springs must be as even as possible. Once the brake is properly supplied, if the brake coil isn't able to attract the brake moving element with a quick stroke and to keep it attracted without any vibrations, check the air gap adjustment. If this inconvenience still persists, loosen the locknut (20) by two threads and try again until the proper functioning is obtained. It is important to consider that some motors can be equipped with 3 springs and some others with 6 (see page 27). Once this operation is completed, check the brake torque to make sure it is set to the desired value. Never set the brake torque to a higher value than the one indicated on the motor nameplate.

Permissible start frequency at load

The technical data tables provide the ideal no-load start frequency (Z_0). The permissible start frequency when an external load is applied (Z_{load}) can be found with the following formula:

$$Z_{load} = Z_0 \cdot K \cdot R$$

where "Z_0" is the table-value for the selected motor and "K" and "R" are factors determined by the curves on the side; the factor "K" is related to the ratio of the moment of inertia of the applied load (J_{app}) and to that of the motor (J_{mot}) while the factor "R" is related to the ratio of the resisting torque (T_r) to the starting torque (T_s). This calculation gives an approximative indication only and it has to be operatively tested for confirmation. If the required starting frequency is close to Z_{load}, it is advisable to use a motor equipped with thermal protectors. It is necessary to check the maximum energy dissipation limit of the brake group and the maximum motor RPM in those applications where high moment of inertia is involved. On request, a special brake disc material is available, which is capable of withstanding a very high dissipation energy. Please contact MGM technical staff for additional information.

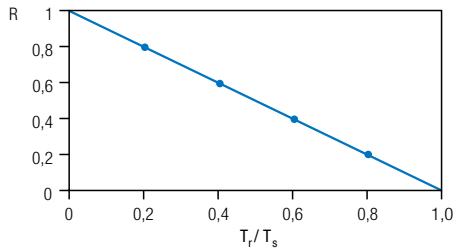

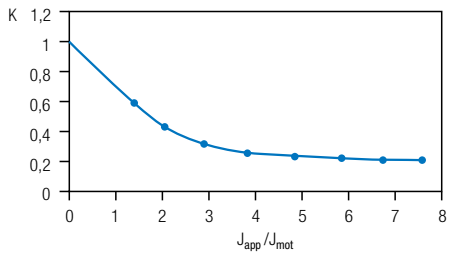

Brake coil wiring diagram

As standard BA series motors are equipped with AC brakes with single terminal board for the brake and the motor, while on request it is possible to supply the brake separately. The AC brake coil can be star or delta connected. On request DC brakes are available for BA series with the rectifier located inside the terminal box. The rectifier is provided with over-voltage protection devices. MGM brake motors equipped with DC brakes can be connected as in diagram A or B according to the required braking time. MGM motors provided with DC brake coil are connected as diagram A. The DC brake coil has to be connected according to diagram B to have a reduced brake reaction time.

AC

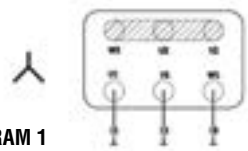

DIAGRAM 1

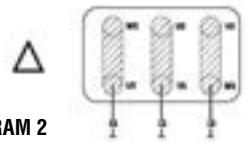

DIAGRAM 2

DC

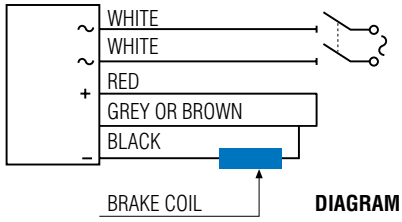

DIAGRAM A

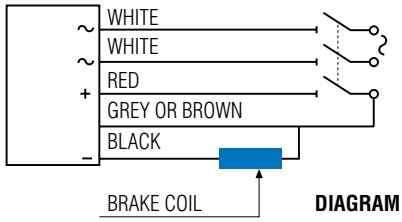

DIAGRAM B

brake torque and brake springs compression

BA Series motors are provided with a brake torque set to 60-70% approx of the maximum admissible brake torque of the AC brake (see the table below). On request the motor can come already set to a specific brake torque value different from the standard one. The brake torque is shown in the diagrams here below as a function of the brake assembly spring compression; for BA 225-315 motors diagrams please contact MGM.
The shown values refer to BA series motors mounted in horizontal position with an AC brake coil. DC brakes have the same trend as AC brakes even if they have lower brake torque, as shown in the table below. For BAK 90-132 motors series the brake torque changes in a different way than shown in the diagrams. Please contact MGM for further information. The values shown in the diagrams are only indicative as application conditions, brake lining wear and temperature, can affect the real brake torque. Whenever it is necessary to adjust the braking torque to a specific value it is advisable to directly measure the obtained brake torque after each brake torque adjustment. Consider that the motor mounting position influences remarkably the effective braking torque when low brake torque values are involved. It is not recommended to adjust the brake torque at values below 40% of the maximum value indicated on the motor nameplate. Please contact MGM for further information.

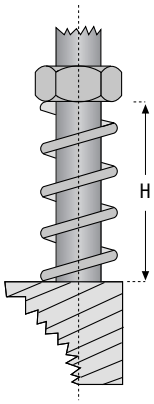

BA series motor type	71	80	90	100	112	132	160	180	200	225	250	280	315
Max AC Brake Torque (Nm)	14	18	38	50	80	150	190	300	300	600	700	1000	1300
Max DC Brake Torque (Nm)	9	15	30	42	60	120	155	180	180	*	*	*	*

BA 71

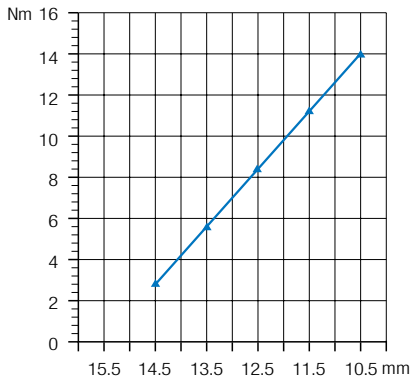

BA 80

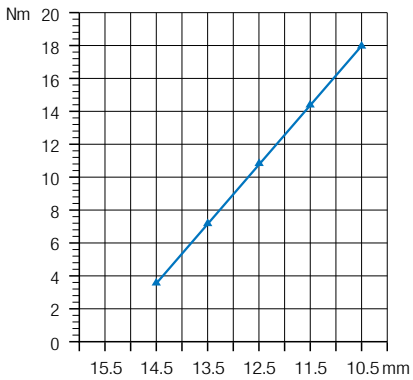

BA 90

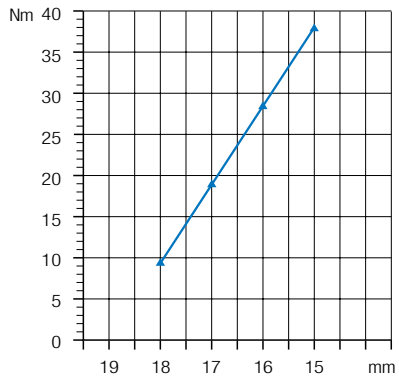

BA 100

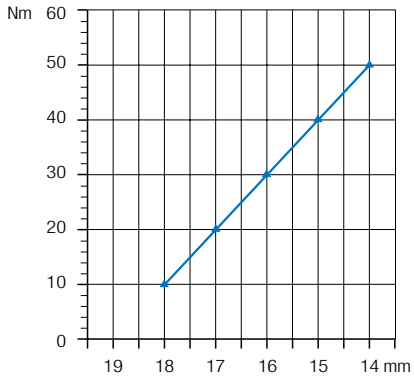

BA 112

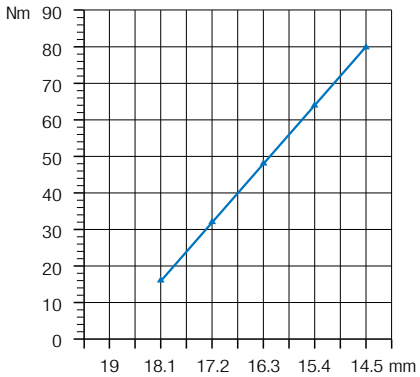

BA 132

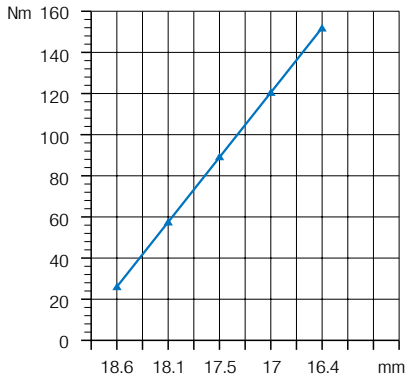

For BA 225-250-280-315 motors diagram please contact MGM.

* different brake torques are available based on customer request. Contact MGM for more information.

BA 160

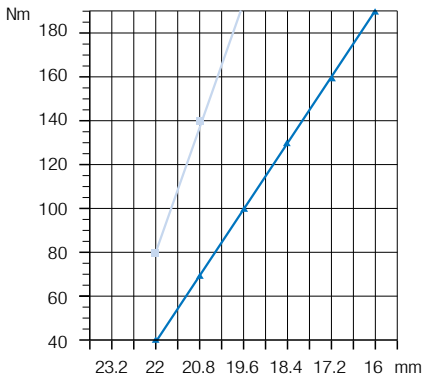

Light blue line: 6 springs brake group
Blue line: 3 springs brake group
Consider that DC brake groups always have 3 springs and 155 Nm max. brake torque.

BA 180-200

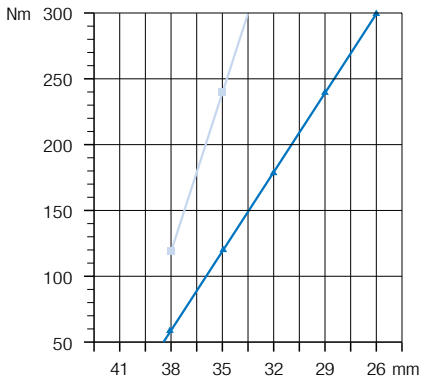

Light blue line: 6 springs brake group
Blue line: 3 springs brake group
Consider that DC brake groups always have 3 springs and 180 Nm max. brake torque.

technical data single speed motors - continuous duty (S1)

IE2/IE3 - Reg. (EU) 2019/1781 - 50Hz

Motor type	P_N (kW)	rpm	In (A) 400 V 50 Hz	cos φ	Cn (Nm)	Ca / Cn	Ia / In	IE	Efficiency 50Hz			Moment of inertia Jx10^{-4}kgm^2	Max AC Brake torque (Nm)	Weight (kg)
									100%	75%	50%			
2 pole - 3000 RPM														
BAX 71 A2	0.37	2810	1.00	0.76	1.26	2.6	4.5	IE2	69.5	68.4	65.3	4.88	14	9.5
BAX 71 B2	0.55	2810	1.40	0.76	1.86	2.6	4.5	IE2	74.1	73.0	69.7	5.48	14	10.5
BAX 80A2	0.75	2849	1.74	0.77	2.52	3.6	5.7	IE3	80.7	80.2	76.6	11.6	18	15
BAX 80 B2	1.1	2865	2.50	0.77	3.66	3.3	5.4	IE3	82.7	83.0	80.9	13.0	18	15.5
BAX 90 SA2	1.5	2890	3.15	0.81	4.95	3.8	8.2	IE3	84.2	85.1	82.8	21.8	38	22
BAX 90 LA2	2.2	2887	4.95	0.75	7.27	4.4	8.4	IE3	85.9	85.7	84.0	25.1	38	25
BAX 100 LB2	3.0	2905	6.60	0.76	9.86	4.4	8.8	IE3	87.1	86.3	84.2	45.8	50	36
BAX 112 MC2	4.0	2935	7.80	0.84	13.00	4.6	10.5	IE3	88.1	88.5	87.0	85.0	80	48
BAX 132SA2	5.5	2935	10.1	0.88	17.89	4.3	9.5	IE3	89.2	89.6	87.4	231	150	71
BAX 132 SB2	7.5	2930	13.4	0.89	24.44	4.0	9.0	IE3	90.1	91.0	90.0	270	150	81
BAX 160 MA2	11	2956	20.5	0.85	35.53	4.5	10.2	IE3	91.2	91.9	90.0	575	190	165
BAX 160 MB2	15	2956	27.5	0.86	48.45	4.6	10.3	IE3	91.9	92.0	90.7	575	190	165
BAX 160 LA2	18.5	2956	33.8	0.86	59.76	4.6	10.3	IE3	92.4	92.6	91.6	675	190	180
BAX 180 LA2	22	2958	36.8	0.93	71.10	4.2	10.8	IE3	92.7	92.0	91.0	1100	300	250
BAX 200 LA2	30	2955	51.7	0.90	97.00	4.7	9.8	IE3	93.3	93.5	92.3	1650	300	300
BAX 200 LB2	37	2955	62.7	0.91	119.60	4.7	9.8	IE3	93.7	94.0	92.1	1650	300	300
4 pole - 1500 RPM														
BAX 71 A4	0.25	1400	0.76	0.69	1.70	2	3.6	IE2	68.5	66.3	61.4	7.20	14	9.5
BAX 71 B4	0.37	1375	1.00	0.74	2.62	2.2	3.9	IE2	72.7	73.0	70.3	8.10	14	10.5
BAX 71 C4	0.55	1360	1.43	0.72	3.86	2.4	4.2	IE2	77.1	78.2	75.1	9.92	14	12
BAX 80 A4	0.55	1410	1.41	0.72	3.70	2.3	4.3	IE2	77.1	76.4	73.5	17.2	18	15
BAX 80 S4	0.72	1400	1.90	0.70	4.98	2.9	5.3	IE2	79.6	79.5	78.0	17.2	18	15
BAX 80 B4	0.75	1415	1.97	0.67	5.06	3.1	5.6	IE3	82.5	82.8	81.2	19.4	18	17
BAX 90 SA4	1.1	1428	2.6	0.73	7.37	3.4	5.7	IE3	84.1	84.3	82.6	30.5	38	21
BAX 90 LA4	1.5	1430	3.5	0.74	10.01	3.5	6.2	IE3	85.3	85.2	83.6	34.6	38	24
BAX 100 S4 (*)(**)	1.85	1432	4.0	0.78	12.33	2.8	6.9	IE3	86.1	86.5	85.4	51.1	50	32
BAX 100 LA4	2.2	1440	4.8	0.76	14.50	2.9	7.0	IE3	86.7	87.0	85.4	60.1	50	36
BAX 112 MB4	3	1455	6.4	0.77	19.68	4.0	8.6	IE3	87.7	88.7	87.2	126	80	45
BAX 112 MC4	4	1445	8.4	0.77	26.40	3.7	7.1	IE3	88.6	88.8	87.6	145	80	50
BAX 132 SB4	5.5	1457	11.0	0.8	36.04	3.5	7.6	IE3	89.6	91.1	89.3	352	150	86
BAX 132 MA4	7.5	1457	14.9	0.82	49.15	3.3	7.9	IE3	90.4	90.7	90.2	398	150	95
BAX 160 MB4	11	1460	22.3	0.78	71.50	3.4	7.3	IE3	91.4	91.6	91.0	737	190	160
BAX 160 LA4	15	1470	30.2	0.77	97.44	3.3	7.6	IE3	92.1	92.3	91.8	900	190	175
BAX 180 LA4	18.5	1475	37.1	0.78	119.77	3.5	9.1	IE3	92.6	92.6	91.7	1900	300	250
BAX 180 LB4	22	1472	41.7	0.82	142.40	4.3	8.6	IE3	93.0	93.0	92.0	1900	300	250
BAX 200 LB4	30	1475	53.2	0.87	194.22	2.9	8.4	IE3	93.6	93.4	93.4	3000	300	300
BAHX 225 S4	37	1480	66.2	0.86	238.73	2.7	8.5	IE3	93.9	94.4	91.9	4900	600	450
BAHX 225 M4	45	1480	79.3	0.87	290.35	2.8	8.8	IE3	94.2	94.7	92.2	5390	600	465
BAHX 250 M4	55	1480	96.6	0.87	354.88	3.2	9.8	IE3	94.6	95.1	92.6	8000	700	665
BAHX 280 S4	75	1488	136.4	0.83	481.32	3.6	10.2	IE3	95.0	95.5	95.0	11500	1000	770
BAHX 280 M4	90	1488	160.7	0.84	577.59	2.6	9.6	IE3	95.2	95.5	93.2	13100	1000	810
BAHX 315 S4	110	1489	193.5	0.86	705.47	2.6	9.2	IE3	95.4	95.9	93.4	27000	1000	1200
BAHX 315 M4	132	1489	231.7	0.86	846.57	2.7	9.2	IE3	95.6	96.1	93.6	31000	1000	1400

IE2/IE3 - Reg. (EU) 2019/1781 - 50Hz

Motor type	P_N (kW)	rpm	In (A) 400 V 50 Hz	cos φ	Cn (Nm)	Ca / Cn	Ia / In	IE	Efficiency 50Hz			Moment of inertia Jx10^{-4}kgm^2	Max AC Brake torque (Nm)	Weight (kg)
									100%	75%	50%			
6 pole - 1000 RPM														
BAX 71 A6	0.18	900	0.61	0.69	2.10	2.0	2.6	IE2	56.6	56.7	52.8	10.1	14	10.5
BAX 71B6	0.25	875	0.80	0.70	2.80	1.6	2.8	IE2	61.6	62.1	57.4	11.5	14	11.0
BAX 80 A6	0.37	940	1.31	0.57	3.80	2.7	3.5	IE2	67.6	67.5	60.8	23.4	18	14.5
BAX 80 B6	0.55	920	1.72	0.63	5.70	2.8	3.5	IE2	73.1	72.8	69.2	27.2	18	15.5
BAX 90 SA6 **	0.75	935	2.10	0.66	7.66	2.5	5.5	IE3	78.9	79.3	77.1	46.0	38	21
BAX 90 LA6 **	1.1	935	3.30	0.61	11.23	3.1	4.6	IE3	81.0	81.4	79.2	53.0	38	24
BAX 100 LA6 **	1.5	955	4.00	0.66	15.20	3.0	5.3	IE3	82.5	82.1	79.1	100	50	35
BAX 112 MC6 **	2.2	960	5.00	0.75	21.88	2.4	6.4	IE3	84.3	84.4	82.5	200	80	50
BAX 132 SB6 **	3	965	6.80	0.75	29.68	3.1	8.1	IE3	85.6	85.8	83.8	346	150	78
BAX 132 MA6 **	4	965	9.20	0.72	39.58	3.1	6.7	IE3	86.8	88.2	87.1	401	150	83
BAX 132 MB6 **	5.5	965	12.50	0.72	54.42	3.0	6.6	IE3	88.0	88.2	86.6	508	150	94
BAX 160 MB6	7.5	965	15.80	0.76	74.21	3.0	7.2	IE3	89.1	89.3	88.2	1100	190	160
BAX 160 LB6	11	965	22.90	0.77	108.85	2.7	9.1	IE3	90.3	90.5	88.5	1350	190	185
BAX 180 LB6	15	978	31.30	0.76	147.70	3.1	9.1	IE3	91.2	91.2	90.0	2400	300	270
BAX 200 LA6	18.5	980	37.40	0.80	180.27	2.0	6.7	IE3	91.7	91.8	89.9	3500	300	300
BAX 200 LB6	22	975	43.10	0.80	215.47	2.0	6.7	IE3	92.2	92.3	90.4	3500	300	300
BAHX 225 M6	30	985	57.90	0.80	291.40	3.7	7.7	IE3	92.9	93.2	92.9	7800	600	445
BAHX 250 M6	37	980	68.20	0.84	360.50	3.2	7.9	IE3	93.3	93.4	91.5	10090	700	675
BAHX 280 S6	45	987	88.80	0.78	436.30	2.8	6.0	IE3	93.7	93.8	91.9	17000	1000	750
BAHX 280 M6	55	987	108.1	0.78	533.20	2.8	6.6	IE3	94.1	94.2	92.3	20000	1000	790
BAHX 315 S6	75	988	141.3	0.81	724.91	2.6	7.0	IE3	94.6	94.7	92.8	34000	1000	1200
BAHX 315 M6	90	988	169.0	0.81	869.90	2.6	7.0	IE3	94.9	95.0	93.1	52000	1000	1400
8 pole - 750 RPM														
BA 71 A8	0.08	660	0.60	0.53	1.16	2.0	2.0	***	42.9	38.6	30.7	7.2	14	10
BAX 71 B8	0.12	680	0.70	0.54	1.69	2.2	2.2	IE2	39.8	40.2	38.0	8.1	14	10.5
BAX 80 A8	0.18	690	0.86	0.60	2.49	2.2	2.4	IE2	45.9	46.3	44.1	23.2	18	14.5
BAX 80 B8	0.25	675	1.10	0.61	3.53	2.2	2.4	IE2	50.6	51.0	48.8	27.2	18	15.5
BAX 90 SA8	0.37	690	1.52	0.59	5.12	2.3	3.3	IE2	56.1	56.5	54.3	35.9	38	20
BAX 90 LA8	0.55	690	2.30	0.56	7.61	2.3	3.1	IE2	61.7	62.1	59.9	46.1	38	22.5
BAX 100 LA8	0.75	700	2.60	0.56	10.23	2.3	3.3	IE3	75.0	75.2	73.2	87.4	50	33
BAX 100 LB8	1.1	700	3.80	0.54	15.00	2.4	4.4	IE3	77.7	77.9	75.9	99.2	50	35
BAX 112 MB8	1.5	710	4.15	0.66	20.18	2.2	5.0	IE3	79.7	79.9	77.9	168	80	45
BAX 132 SB8	2.2	710	5.55	0.70	29.59	2.3	5.2	IE3	81.9	82.1	80.1	325	150	73
BAX 132 MB8	3	710	7.40	0.70	40.35	2.3	5.2	IE3	83.5	83.7	81.7	413	150	80
BAX 160 MA8	4	725	9.60	0.71	52.68	2.5	6.7	IE3	84.8	84.9	83.0	1030	190	156
BAX 160 MB8	5.5	725	13.40	0.69	72.44	2.5	6.7	IE3	86.2	86.3	84.4	1030	190	156
BAX 160 LA8	7.5	725	18.30	0.68	98.78	2.5	6.7	IE3	87.3	87.4	85.5	1360	190	174
BAX 180 LB8	11	730	26.10	0.69	143.89	2.4	5.7	IE3	88.6	88.7	86.8	2460	300	243
BAX 200 LA8	15	735	34.70	0.70	194.88	2.1	6.5	IE3	89.6	89.7	87.8	4700	300	300
BAHX 225 S8	18.5	740	44.00	0.67	238.73	2.4	7.5	IE3	90.1	90.1	88.3	7470	600	480
BAHX 225 M8	22	735	49.40	0.70	285.83	2.1	7.0	IE3	90.6	90.6	89.0	7470	600	480
BAHX 250 M8	30	740	64.17	0.74	387.14	2.1	6.8	IE3	91.3	91.3	89.5	10500	700	675
BAHX 280 S8	37	745	75.64	0.77	474.27	2.2	7.0	IE3	91.8	91.8	90.0	20500	1000	750
BAHX 280 M8	45	745	90.42	0.78	576.82	2.2	7.2	IE3	92.2	92.2	90.4	23500	1000	790

*** The EN 60034-30-1 standard specifies the IE efficiency classes for motors with power between 0.12 kW and 1000 kW. For motors with lower power it is therefore not possible to define the efficiency class, moreover these motors are outside the scope of the EU regulation 2019/1781.

1. Motor characteristic values reported in the tables refer to continuous duty (S1), voltage 3~400V 50 Hz, ambient temperature max. 40 °C, altitude up to 1000 m above sea level operating condition
2. The motor marked with * can be supplied with reduced shaft and flange with the dimensions related to the frame size 90.
3. The motors nameplates have the data relating to operation at both 50 Hz and 60 Hz with the same power value except for the motors marked with **.
4. BAX motor series have the same brake components as the BA with the same frame size, therefore the braking performance are the same. The maximum brake torque values indicated on the chart refer to AC brake, DC brake on BA-BAX series is available on request only.
5. The maximum brake torque for BAXK 132 motors series is 120 Nm.
6. MGM keeps the data provided as up-to-date and correct as possible. Since the products are subject to changes and improvements, the data indicated cannot be considered binding. The data indicated must also be understood as being general in nature. For specific applications, please contact the MGM staff.

technical data two speed motors - single winding

Motor type	Power (kW)	rpm	In (A) 400 V	cos φ	Tn (Nm)	Ts / Tn	Is / In	AC brake In (mA)	DC brake In (mA)	Z_0 (starts /hour)	Moment of inertia Jx 10^{-4} Kgm^2	Max AC brake torque (Nm)	A-Sound pressure dB (A)	Weight (Kg)
2/4 pole														3000 / 1500 r.p.m.
BAD 71 A2/4	0.25 0.18	2820 1415	0.75 0.70	0.73 0.66	0.85 1.21	2.2 2.4	3.8 3.1	90	110	8500 18000	7.20	14	59 45	10.0
BAD 71 B2/4	0.37 0.25	2820 1415	1.00 0.85	0.77 0.63	1.25 1.69	2.3 2.8	4.7 4.2	90	110	7000 16000	8.10	14	59 45	11.0
BAD 80 A2/4	0.65 0.45	2790 1400	1.80 1.35	0.81 0.72	2.22 3.07	2.0 2.1	4.1 4.0	140	150	3000 10000	14.97	18	65 47	14.5
BAD 80 B2/4	0.88 0.62	2800 1390	2.2 1.7	0.80 0.74	3.00 4.26	2.0 2.2	4.9 4.5	140	150	3000 10000	17.19	18	65 47	15.5
BAD 90 SB2/4	1.3 0.9	2800 1420	3.2 2.3	0.85 0.73	4.43 6.05	2.3 2.5	5.2 5.0	300	150	3000 9500	26.15	38	72 55	20
BAD 90 LA2/4	1.8 1.2	2800 1420	4.4 3.1	0.83 0.71	6.14 8.07	2.6 3.0	5.6 6.0	300	150	2500 9000	30.53	38	72 55	23
BAD 90 LB2/4	2.2 1.5	2860 1430	5.4 3.8	0.82 0.73	7.35 10.02	2.5 3.0	5.9 6.0	300	150	2500 8500	34.57	38	72 55	24
BAD 100 LA2/4	2.2 1.5	2875 1425	5.0 3.8	0.85 0.81	7.31 10.05	2.3 2.5	6.0 5.6	300	150	1800 6500	51.14	50	74 57	32
BAD 100 LB2/4	3.1 2.3	2875 1425	6.7 5.2	0.85 0.82	10.30 15.41	2.3 2.4	7.0 6.5	300	150	1700 6000	60.07	50	74 57	36
BAD 112 MB2/4	4.5 3.3	2880 1400	9.2 6.9	0.88 0.86	14.92 22.51	2.4 2.8	7.0 6.5	280	470	900 3800	125.7	80	75 61	45
BAD 132 SB2/4	5.0 4.5	2940 1450	10.9 9.3	0.81 0.84	16.24 29.64	2.8 2.6	8.0 7.5	580	680	400 1000	277.0	150	75 62	78
BAD 132 MA2/4	6.0 5.0	2940 1450	11.7 10.0	0.88 0.85	19.49 32.93	2.6 2.5	8.0 7.5	580	680	400 900	352.0	150	75 62	87
BAD 132 MB2/4	7.5 6.0	2940 1450	16.0 12.2	0.82 0.83	24.36 39.52	2.4 2.5	8.0 7.5	580	680	400 900	352.0	150	75 62	87
BAD 160 MA2/4	9.5 8.0	2870 1420	20.0 16.6	0.89 0.85	31.61 53.80	2.8 2.6	7.5 6.0	1390	860	300 800	607.0	190	77 63	154
BAD 160 MB2/4	11.0 9.0	2870 1420	23.3 18.7	0.88 0.85	36.60 60.53	2.8 2.6	6.8 6.0	1390	860	300 800	683.0	190	77 63	154
BAD 160 LA2/4	13.0 11.0	2890 1420	26.1 21.2	0.91 0.87	42.96 73.98	2.8 2.6	7.0 6.3	1390	860	250 750	858.0	190	77 63	171
BAD 180 LA2/4	17.0 14.0	2900 1440	33.0 26.8	0.89 0.86	55.98 92.85	2.9 2.7	8.0 6.5	950	1100	100 500	1740.0	300	78 64	243
BAD 180 LB2/4	20.5 17.0	2900 1430	41.5 33.3	0.89 0.86	67.51 113.53	2.9 2.7	8.0 6.5	950	1100	100 500	1740.0	300	78 64	243
BAD 200 LB2/4	24.0 20.0	2910 1435	49.0 41.0	0.86 0.82	78.76 133.10	2.5 2.4	8.0 6.5	950	1100	70 250	1980.0	300	79 66	274

1. Motor characteristic values reported in the tables refer to continuous duty (S1), 50 Hz frequency, ambient temperature max. 40 °C, altitude up to 1000 m. above sea level operating condition.
2. DC brake is provided on request only, on BA series motors . Brake current consumption values refer to a rated voltage of 3-phase 400V for AC brakes and single-phase 230V for DC brakes.
3. The table shows the sound pressure noise level, measured at one metre range from the motor according to the Acurve (ISO 1680). The shown noise levels refer to motor no-load operating condition and should be regarded with a tolerance of ± 3dB.
4. Max brake torque and Z_0 values refer to AC brake. Go to pag. 27 for DC max brake torque values.
5. The expressed Z_0 values refers to AC Brake. Z_0 is the max number of no-load starts. It is meant for calculation purposes only, and is used to obtain the max number of starts with load according to the formula expressed at page 26. The number of starts with load (Z_{load}) is indicative and it has to be operatively tested for confirmation. The use of Thermoprotectors is strongly recommended when the operative number of starts is close to the calculated Zload. It is necessary to verify the max permissible brake energy dissipation and the max permissible RPM.
6. The maximum brake torque for BAK 132 motors series is 120Nm.
7. MGM keeps the data provided as up-to-date and correct as possible. Since the products are subject to changes and improvements, the data indicated cannot be considered binding. The data indicated must also be understood as being general in nature. For specific applications, please contact the MGM staff.

technical data two speed motors - single winding

Motor type	Power (kW)	rpm	In (A) 400 V	cos φ	Tn (Nm)	Ts / Tn	Is / In	AC brake In (mA)	DC brake In (mA)	Z_0 (starts /hour)	Moment of inertia Jx 10^{-4} Kgm^2	Max AC brake torque (Nm)	A-Sound pressure dB (A)	Weight (Kg)
4/8 pole												1500 / 750 r.p.m.		
BAD 71 A4/8	0.13 0.07	1385 700	0.35 0.45	0.82 0.60	0.90 0.96	1.6 1.8	3.0 2.0	90	110	12000 30000	10.08	14	45 43	10.5
BAD 71 B4/8	0.18 0.09	1370 685	0.50 0.60	0.83 0.59	1.25 1.25	1.8 2.0	3.2 2.0	90	110	11000 30000	11.54	14	45 43	11.0
BAD 71 C4/8	0.22 0.12	1370 685	0.60 0.75	0.83 0.59	1.53 1.67	1.6 1.8	3.0 2.0	90	110	10000 28000	12.35	14	45 43	12.0
BAD 80 A4/8	0.25 0.18	1405 675	0.70 0.90	0.86 0.65	1.70 2.55	2.2 2.0	4.1 2.4	140	150	9000 22000	23.40	18	47 45	14.5
BAD 80 B4/8	0.37 0.25	1405 675	0.85 1.15	0.86 0.65	2.51 3.54	2.2 2.0	4.1 2.4	140	150	9000 22000	27.21	18	47 45	15.5
BAD 90 SA4/8	0.75 0.37	1350 695	1.70 1.80	0.85 0.53	5.31 5.08	1.8 2.3	3.9 2.7	300	150	10000 15000	35.93	38	55 46	20
BAD 90 LB4/8	1.1 0.6	1390 695	2.7 3.0	0.82 0.53	7.56 8.24	2.0 2.5	4.5 2.7	300	150	8500 13000	52.62	38	55 46	24
BAD 100 LB4/8	1.6 0.9	1395 700	3.6 3.5	0.87 0.58	10.95 12.28	2.0 2.2	5.0 3.5	300	150	4100 8500	99.19	50	57 49	35
BAD 112 MB4/8	2.2 1.2	1440 720	4.8 4.6	0.86 0.57	14.59 15.92	2.5 3.1	5.5 4.1	280	470	3800 8000	168.3	80	61 52	45
BAD 132 SB4/8	3.0 2.0	1440 720	6.6 5.8	0.85 0.64	19.90 26.53	2.2 2.5	6.0 5.0	580	680	1000 2000	325.0	150	62 55	73
BAD 132 MA4/8	4.0 2.7	1440 720	8.8 7.8	0.85 0.64	26.53 35.81	2.2 2.5	6.0 5.0	580	680	1000 2000	413.0	150	62 55	80
BAD 132 MB4/8	6.0 4.0	1440 720	13.0 11.6	0.85 0.64	39.79 53.06	2.2 2.5	6.0 5.0	580	680	1000 2000	611.0	150	62 55	118
BAD 160 MB4/8	6.5 4.5	1470 730	15.1 13.3	0.80 0.62	42.23 58.87	2.6 2.4	8.0 6.5	1390	860	800 1450	1030.0	190	63 58	156
BAD 160 LA4/8	9.5 6.0	1470 730	21.5 17.6	0.82 0.62	61.72 78.49	2.6 2.4	8.0 6.5	1390	860	750 1400	1360.0	190	63 58	174
BAD 180 LA4/8	11.0 8.0	1470 730	22.0 19.2	0.85 0.70	71.46 105.38	2.8 2.4	7.5 7.0	950	1100	450 750	2460.0	300	64 59	243
BAD 180 LB4/8	14.0 9.0	1465 730	27.1 22.3	0.87 0.68	91.26 117.74	2.7 2.5	7.5 7.0	950	1100	400 700	2460.0	300	64 59	243
BAD 200 LA4/8	18.0 11.0	1430 710	36.3 27.2	0.88 0.71	120.21 147.96	2.8 2.6	7.5 8.0	950	1100	70 250	2880.0	300	66 60	293
BAD 200 LB4/8	21.0 13.0	1425 710	41.6 31.7	0.88 0.70	140.74 174.86	2.6 2.4	7.0 6.5	950	1100	70 250	2880.0	300	66 60	293
BAHD 225 S4/8	30.0 18.0	1470 730	56.6 43.2	0.87 0.70	195.00 235.60	2.5 2.4	7.5 7.0	1350	1500	60 200	6500.0	600	68 62	392
BAHD 225 M4/8	35.0 25.0	1470 730	66.1 60.0	0.87 0.70	227.50 327.20	2.5 2.3	7.5 6.8	1350	1500	60 200	6900.0	600	68 62	440
BAHD 250 M4/8	42.0 30.0	1470 730	75.0 65.0	0.89 0.75	272.00 392.00	1.9 1.7	5.5 4.0	2000	-	60 200	11680.0	700	70 65	800

1. Motor characteristic values reported in the tables refer to continuous duty (S1), 50 Hz frequency, ambient temperature max. 40 °C, altitude up to 1000 m. above sea level operating condition.
2. DC brake is provided on request only, on BA series motors . Brake current consumption values refer to a rated voltage of 3-phase 400V for AC brakes and single-phase 230V for DC brakes.
3. The table shows the sound pressure noise level, measured at one metre range from the motor according to the Acurve (ISO 1680). The shown noise levels refer to motor no-load operating condition and should be regarded with a tolerance of ± 3dB.
4. Max brake torque and Z_0 values refer to AC brake. Go to pag. 27 for DC max brake torque values.
5. The expressed Z_0 values refers to AC Brake. Z_0 is the max number of no-load starts. It is meant for calculation purposes only, and is used to obtain the max number of starts with load according to the formula expressed at page 26. The number of starts with load (Z_{load}) is indicative and it has to be operatively tested for confirmation. The use of Thermo-protectors is strongly recommended when the operative number of starts is close to the calculated Zload. It is necessary to verify the max permissible brake energy dissipation and the max permissible RPM.
6. The maximum brake torque for BAK 132 motors series is 120Nm.
7. MGM keeps the data provided as up-to-date and correct as possible. Since the products are subject to changes and improvements, the data indicated cannot be considered binding. The data indicated must also be understood as being general in nature. For specific applications, please contact the MGM staff.

technical data two speed motors - two windings

Motor type	Power (kW)	rpm	In (A) 400 V	cos φ	Tn (Nm)	Ts / Tn	Is / In	AC brake In (mA)	DC brake In (mA)	Z_0 (starts /hour)	Moment of inertia Jx 10^{-4} Kgm^2	Max AC brake torque (Nm)	A-Sound pressure dB (A)	Weight (Kg)
2/6 pole														3000 / 1000 r.p.m.
BADA 71 B2/6	0.25 0.08	2880 940	0.85 0.60	0.74 0.64	0.83 0.81	2.6 2.2	4.3 2.0	90	110	3600 15000	8.10	14	59 45	11.0
BADA 71 C2/6	0.35 0.10	2880 940	1.05 0.60	0.75 0.59	1.16 1.02	2.6 2.2	5.0 2.3	90	110	3000 12000	9.43	14	59 45	12.0
BADA 80 A2/6	0.37 0.12	2885 945	1.35 0.80	0.67 0.57	1.22 1.21	2.6 1.9	5.0 2.5	140	150	2000 15000	14.97	18	65 47	14.5
BADA 80 B2/6	0.55 0.18	2885 945	1.75 1.05	0.67 0.57	1.82 1.82	2.6 1.9	5.0 2.5	140	150	2000 15000	17.19	18	65 47	15.5
BADA 90 SA2/6	0.9 0.3	2875 950	2.10 1.15	0.86 0.65	2.99 3.02	2.5 2.2	5.0 2.5	300	150	1800 15000	26.15	38	72 54	22.5
BADA 90 LA2/6	1.2 0.4	2875 950	2.80 1.55	0.86 0.65	3.99 4.02	2.5 2.2	5.0 2.5	300	150	1800 1350	30.53	38	72 54	23
BADA 90 LB2/6	1.4 0.5	2890 940	3.2 1.8	0.86 0.55	4.63 5.08	2.7 2.5	5.0 3.0	300	150	1800 12000	34.57	38	72 54	24
BADA 100 LA2/6	1.6 0.6	2810 900	3.7 1.9	0.85 0.68	5.44 6.37	2.6 2.3	5.4 3.4	300	150	1800 15000	51.14	50	74 56	32
BADA 100 LB2/6	2.2 0.8	2800 910	4.8 2.5	0.90 0.67	7.50 8.40	2.6 2.3	5.4 3.4	300	150	1000 15000	60.07	50	74 56	36
BADA 112 MB2/6	3.0 1.0	2870 950	6.4 3.2	0.86 0.61	9.98 10.05	3.0 3.2	7.0 4.5	280	470	1100 8600	125.7	80	75 58	45
BADA 132 SB2/6	4.0 1.3	2880 940	8.9 3.7	0.85 0.69	13.26 13.21	3.0 2.8	7.0 4.5	580	680	350 1700	277.0	150	75 58	78
BADA 132 MA2/6	5.5 1.8	2870 940	11.5 5.1	0.88 0.69	18.30 18.29	3.0 2.8	7.5 4.5	580	680	350 1400	352.0	150	75 58	87
BADA 132 MB2/6	7.0 2.2	2870 940	14.9 6.3	0.88 0.69	23.29 22.35	3.0 2.8	7.5 4.5	580	680	350 1100	432.0	150	75 58	98
BADA 160 MB2/6	8.0 2.5	2890 950	15.9 6.9	0.92 0.74	26.44 25.13	3.0 2.0	8.0 4.3	1390	860	250 1000	683.0	190	77 59	154
BADA 160 LA2/6	11.0 3.6	2890 950	21.4 9.3	0.92 0.74	36.35 36.19	3.0 2.0	8.0 4.3	1390	860	250 900	858.0	190	77 59	171
BADA 180 LB2/6	16.0 6.5	2910 960	30.3 16.0	0.93 0.72	52.51 64.66	3.0 2.4	8.0 5.0	950	1100	100 250	1740.0	300	78 60	243

1. Motor characteristic values reported in the tables refer to continuous duty (S1), 50 Hz frequency, ambient temperature max. 40 °C, altitude up to 1000 m. above sea level operating condition.
2. DC brake is provided on request only, on BA series motors . Brake current consumption values refer to a rated voltage of 3-phase 400V for AC brakes and single-phase 230V for DC brakes.
3. The table shows the sound pressure noise level, measured at one metre range from the motor according to the Acurve (ISO 1680). The shown noise levels refer to motor no-load operating condition and should be regarded with a tolerance of ± 3dB.
4. Max brake torque and Z_0 values refer to AC brake. Go to pag. 27 for DC max brake torque values.
5. The expressed Z_0 values refers to AC Brake. Z_0 is the max number of no-load starts. It is meant for calculation purposes only, and is used to obtain the max number of starts with load according to the formula expressed at page 26. The number of starts with load (Z_{load}) is indicative and it has to be operatively tested for confirmation. The use of Thermo-protectors is strongly recommended when the operative number of starts is close to the calculated Zload. It is necessary to verify the max permissible brake energy dissipation and the max permissible RPM.
6. The maximum brake torque for BAK 132 motors series is 120Nm.
7. MGM keeps the data provided as up-to-date and correct as possible. Since the products are subject to changes and improvements, the data indicated cannot be considered binding. The data indicated must also be understood as being general in nature. For specific applications, please contact the MGM staff.

technical data two speed motors - two windings

Motor type	Power (kW)	rpm	In (A) 400 V	cos φ	Tn (Nm)	Ts / Tn	Is / In	AC brake In (mA)	DC brake In (mA)	Z_0 (starts /hour)	Moment of inertia Jx 10^{-4} Kgm^2	Max AC brake torque (Nm)	A-Sound pressure dB (A)	Weight (Kg)
2/8 pole												3000 / 750 r.p.m.		
BADA 71 B2/8	0.25 0.06	2900 700	0.85 0.55	0.69 0.54	0.82 0.82	2.8 1.8	4.0 1.5	90	110	3600 25000	9.10	14	59 43	11.0
BADA 71 C2/8	0.35 0.07	2900 700	1.05 0.75	0.70 0.52	1.15 0.96	2.5 2.2	4.3 1.6	90	110	3000 22000	9.43	14	65 43	12.0
BADA 80 A2/8	0.37 0.09	2885 690	1.35 0.70	0.67 0.54	1.22 1.25	2.3 1.8	5.0 1.7	140	150	2000 20000	14.97	18	65 45	14.5
BADA 80 B2/8	0.55 0.12	2885 690	1.75 0.90	0.67 0.54	1.82 1.66	2.3 2.0	5.0 1.7	140	150	2000 20000	17.19	18	72 45	15.5
BADA 90 SB2/8	0.75 0.18	2800 610	1.90 1.05	0.77 0.65	2.56 2.82	3.0 2.1	5.1 1.9	300	150	1800 18000	26.15	38	72 46	22.5
BADA 90 LA2/8	1.10 0.25	2800 640	2.70 1.45	0.81 0.58	3.75 3.73	3.0 2.1	5.1 1.9	300	150	1800 17000	30.53	38	72 46	23.0
BADA 90 LB2/8	1.3 0.3	2820 640	3.10 1.75	0.81 0.58	4.40 4.48	3.2 2.4	5.7 2.0	300	150	1800 16000	34.57	38	72 46	24.0
BADA 100 LA2/8	1.6 0.4	2810 660	3.7 2.0	0.85 0.58	5.44 5.79	2.7 2.0	5.3 2.2	300	150	1800 16000	51.14	50	74 49	32
BADA 100 LB2/8	2.2 0.5	2800 660	4.8 2.5	0.90 0.59	7.50 7.23	2.8 2.3	5.7 2.3	300	150	1000 10500	60.07	50	74 49	36
BADA 112 MB2/8	3.0 0.8	2860 690	6.3 3.5	0.87 0.63	10.02 11.07	3.3 2.6	7.5 3.2	280	470	1100 9000	125.7	80	75 52	45
BADA 132 SB2/8	4.0 1.1	2880 680	8.9 4.0	0.85 0.60	13.26 15.45	3.0 1.9	7.0 3.3	580	680	430 1800	277.0	150	75 55	78
BADA 132 MA2/8	5.5 1.5	2870 680	11.5 5.6	0.88 0.59	18.30 21.07	3.0 2.0	7.5 3.0	580	680	400 1800	352.0	150	75 55	87
BADA 132 MB2/8	7.0 1.8	2870 680	14.9 7.3	0.88 0.59	23.29 25.28	3.0 2.0	7.5 3.0	580	680	400 1800	432.0	150	75 55	98
BADA 160 MB2/8	8.0 2.2	2880 705	16.7 7.6	0.91 0.65	26.53 29.80	3.0 1.9	8.0 3.3	1390	860	300 1500	683.0	190	77 58	154
BADA 160 LA2/8	11.0 3.0	2880 710	21.5 10.2	0.92 0.65	36.48 40.35	3.0 1.9	8.0 3.3	1390	860	300 1500	858.0	190	77 58	171
BADA 180 LB2/8	16.0 4.0	2915 715	30.0 11.5	0.93 0.66	52.42 53.43	3.0 1.9	8.0 3.3	950	1100	100 300	1740.0	300	79 59	243
BADA 200 LB2/8	18.5 4.5	2915 715	35.0 13.5	0.93 0.66	60.61 60.10	3.0 1.9	8.0 3.3	950	1100	100 300	2030.0	300	79 59	255

1. Motor characteristic values reported in the tables refer to continuous duty (S1), 50 Hz frequency, ambient temperature max. 40 °C, altitude up to 1000 m. above sea level operating condition.
2. DC brake is provided on request only, on BA series motors . Brake current consumption values refer to a rated voltage of 3-phase 400V for AC brakes and single-phase 230V for DC brakes.
3. The table shows the sound pressure noise level, measured at one metre range from the motor according to the Acurve (ISO 1680). The shown noise levels refer to motor no-load operating condition and should be regarded with a tolerance of ± 3dB.
4. Max brake torque and Z_0 values refer to AC brake. Go to pag. 27 for DC max brake torque values.
5. The expressed Z_0 values refers to AC Brake. Z_0 is the max number of no-load starts. It is meant for calculation purposes only, and is used to obtain the max number of starts with load according to the formula expressed at page 26. The number of starts with load (Z_{load}) is indicative and it has to be operatively tested for confirmation. The use of Thermo-protectors is strongly recommended when the operative number of starts is close to the calculated Zload. It is necessary to verify the max permissible brake energy dissipation and the max permissible RPM.
6. The maximum brake torque for BAK 132 motors series is 120Nm.
7. MGM keeps the data provided as up-to-date and correct as possible. Since the products are subject to changes and improvements, the data indicated cannot be considered binding. The data indicated must also be understood as being general in nature. For specific applications, please contact the MGM staff.

technical data two speed motors - two windings

Motor type	Power (kW)	rpm	In (A) 400 V	cos φ	Tn (Nm)	Ts / Tn	Is / In	AC brake In (mA)	DC brake In (mA)	Z_0 (starts /hour)	Moment of inertia Jx 10^{-4} Kgm^2	Max AC brake torque (Nm)	A-Sound pressure dB (A)	Weight (Kg)
4/6 pole														1500 / 1000 r.p.m.
BADA 71 C4/6	0.18 0.11	1415 930	0.60 0.50	0.76 0.66	1.21 1.13	1.9 2.0	3.0 2.3	90	110	7500 15000	12.35	14	45 45	12.0
BADA 80 A4/6	0.25 0.18	1430 940	0.85 0.80	0.79 0.71	1.67 1.83	2.2 1.8	4.3 3.0	140	150	7000 15000	23.40	18	47 47	14.5
BADA 80 B4/6	0.37 0.25	1430 940	1.05 0.95	0.79 0.71	2.47 2.54	2.2 1.8	4.3 3.0	140	150	7000 15000	27.21	18	47 47	15.5
BADA 90 SA4/6	0.55 0.37	1420 950	1.60 1.45	0.78 0.62	3.70 3.72	1.9 2.1	3.8 3.3	300	150	6000 12000	35.93	38	55 54	20.0
BADA 90 LB4/6	0.75 0.55	1420 950	2.20 1.9	0.78 0.62	5.04 5.53	2.0 2.1	3.8 3.3	300	150	5500 10000	46.08	38	55 54	23.0
BADA 100 LA4/6	1.1 0.8	1445 955	3.0 2.4	0.76 0.71	7.27 8.00	2.0 2.1	5.3 4.4	300	150	2000 50000	86.40	50	57 56	33.0
BADA 100 LB4/6	1.5 1.1	1440 950	3.9 3.3	0.75 0.68	9.95 11.06	2.0 2.1	5.2 4.4	300	150	1800 8000	99.19	50	57 56	35.0
BADA 112 MB4/6	2.0 1.3	1385 930	4.4 3.5	0.88 0.75	13.79 13.35	2.6 2.1	5.3 4.4	280	470	2600 5500	168.3	80	61 58	45
BADA 132 SB4/6	2.2 1.5	1440 950	5.1 4.4	0.78 0.69	14.59 15.08	2.9 2.6	7.0 5.5	580	680	600 1000	346.0	150	62 58	78
BADA 132 MA4/6	3.0 2.2	1440 950	6.4 6.0	0.81 0.71	19.90 22.12	2.7 2.4	7.0 5.0	580	680	600 1000	401.0	150	62 58	83
BADA 132 MB4/6	3.7 2.5	1440 950	8.2 7.0	0.78 0.69	24.54 25.13	2.9 2.6	7.0 5.5	580	680	500 900	508.0	150	62 58	94
BADA 160 MB4/6	5.5 3.7	1390 940	11.1 8.9	0.93 0.81	37.79 37.59	2.5 2.3	5.8 5.2	1390	860	400 700	943.0	190	63 59	156
BADA 160 LB4/6	7.5 5.0	1390 940	15.2 12.2	0.93 0.81	51.53 50.80	2.5 2.3	6.0 5.2	1390	860	400 700	1240.0	190	63 59	174
BADA 180 LB4/6	13.0 8.8	1440 950	24.6 18.9	0.91 0.82	86.22 88.46	2.95 2.00	7.0 6.0	950	1100	350 850	2070.0	300	64 60	243

1. Motor characteristic values reported in the tables refer to continuous duty (S1), 50 Hz frequency, ambient temperature max. 40 °C, altitude up to 1000 m. above sea level operating condition.
2. DC brake is provided on request only, on BA series motors . Brake current consumption values refer to a rated voltage of 3-phase 400V for AC brakes and single-phase 230V for DC brakes.
3. The table shows the sound pressure noise level, measured at one metre range from the motor according to the Acurve (ISO 1680). The shown noise levels refer to motor no-load operating condition and should be regarded with a tolerance of ± 3dB.
4. Max brake torque and Z_0 values refer to AC brake. Go to pag. 27 for DC max brake torque values.
5. The expressed Z_0 values refers to AC Brake. Z_0 is the max number of no-load starts. It is meant for calculation purposes only, and is used to obtain the max number of starts with load according to the formula expressed at page 26. The number of starts with load (Z_{load}) is indicative and it has to be operatively tested for confirmation. The use of Thermo-protectors is strongly recommended when the operative number of starts is close to the calculated Zload. It is necessary to verify the max permissible brake energy dissipation and the max permissible RPM.
6. The maximum brake torque for BAK 132 motors series is 120Nm.
7. MGM keeps the data provided as up-to-date and correct as possible. Since the products are subject to changes and improvements, the data indicated cannot be considered binding. The data indicated must also be understood as being general in nature. For specific applications, please contact the MGM staff.

technical data two speed motors - two windings

Motor type	Power (kW)	rpm	In (A) 400 V	cos φ	Tn (Nm)	Ts / Tn	Is / In	AC brake In (mA)	DC brake In (mA)	Z_0 (starts /hour)	Moment of inertia Jx 10^{-4} Kgm^2	Max AC brake torque (Nm)	A-Sound pressure dB (A)	Weight (Kg)
4/12 pole						S3 40%						1500 / 500 r.p.m.		
BADA 80 A4/12	0.25 0.05	1425 435	0.85 0.60	0.77 0.63	1.68 1.10	1.8 1.9	3.7 1.6	140	110	7000 24000	23.40	18	47 43	14.5
BADA 80 B4/12	0.37 0.07	1425 435	1.05 0.75	0.77 0.63	2.48 1.54	1.8 1.9	3.7 1.6	140	110	7000 24000	27.21	18	47 43	15.5
BADA 90 SA4/12	0.40 0.13	1360 380	1.25 1.05	0.73 0.59	2.81 3.27	2.5 2.0	3.5 1.6	300	150	5500 30000	35.93	38	55 44	20.0
BADA 90 LA4/12	0.55 0.18	1400 400	1.65 1.20	0.76 0.64	3.75 4.30	2.5 1.8	3.5 1.6	300	150	5500 30000	46.08	38	55 44	23.0
BADA 90 LB4/12	0.75 0.22	1370 400	2.05 1.60	0.76 0.65	5.23 5.25	2.5 2.0	3.5 1.6	300	150	5000 28000	52.62	38	55 44	24.0
BADA 100 LA4/12	0.90 0.25	1440 450	2.3 2.1	0.76 0.50	5.97 5.31	2.2 1.8	5.3 1.7	300	150	4400 15000	87.40	50	57 47	33.0
BADA 100 LB4/12	1.10 0.35	1440 450	2.8 2.6	0.76 0.50	7.30 7.43	2.2 1.8	5.3 1.7	300	150	2100 13000	99.19	50	57 47	35.0
BADA 112 MB4/12	1.50 0.45	1420 440	3.4 2.4	0.84 0.55	10.09 9.77	2.2 2.0	6.0 2.2	280	470	2600 15000	168.3	80	61 50	45.0
BADA 132 SA4/12	2.50 0.80	1440 440	5.4 3.8	0.81 0.53	16.58 17.36	2.7 1.6	7.0 2.4	580	680	800 2200	346.0	150	62 58	78.0
BADA 132 MA4/12	3.0 1.0	1440 440	6.4 4.5	0.81 0.53	19.90 21.70	2.7 1.6	7.0 2.4	580	680	800 2200	401.0	150	62 58	83
BADA132 MB4/12	4.0 1.3	1440 440	8.5 5.9	0.81 0.55	26.53 28.22	2.7 1.6	7.0 2.4	580	680	800 2200	508.0	150	62 58	94
BADA 160 MB4/12	4.8 1.6	1425 455	10.0 7.2	0.89 0.57	32.17 33.58	2.8 2.0	7.5 3.0	1390	860	600 1700	943.0	190	63 61	156
BADA 160LB4/12	7.3 2.4	1410 445	15.2 10.1	0.90 0.61	49.44 51.51	2.8 2.0	7.0 3.0	1390	860	600 1700	1240.0	190	63 61	174

1. Motor characteristic values reported in the tables refer to 50 Hz frequency, ambient temperature max. 40 °C, altitude up to 1000 m. above sea level operating condition.
2. DC brake is provided on request only, on BA series motors . Brake current consumption values refer to a rated voltage of 3-phase 400V for AC brakes and single-phase 230V for DC brakes.
3. The table shows the sound pressure noise level, measured at one metre range from the motor according to the Acurve (ISO 1680). The shown noise levels refer to motor no-load operating condition and should be regarded with a tolerance of ± 3dB.
4. Max brake torque and Z_0 values refer to AC brake. Go to pag. 27 for DC max brake torque values.
5. The expressed Z_0 values refers to AC Brake. Z_0 is the max number of no-load starts. It is meant for calculation purposes only, and is used to obtain the max number of starts with load according to the formula expressed at page 26. The number of starts with load (Z_{load}) is indicative and it has to be operatively tested for confirmation. The use of Thermo-protectors is strongly recommended when the operative number of starts is close to the calculated Zload. It is necessary to verify the max permissible brake energy dissipation and the max permissible RPM.
6. The maximum brake torque for BAK 132 motors series is 120Nm.
7. MGM keeps the data provided as up-to-date and correct as possible. Since the products are subject to changes and improvements, the data indicated cannot be considered binding. The data indicated must also be understood as being general in nature. For specific applications, please contact the MGM staff.

technical data two speed motors - two windings

Motor type	Power (kW)	rpm	In (A) 400 V	cos φ	Tn (Nm)	Ts / Tn	Is / In	AC brake In (mA)	DC brake In (mA)	Z_0 (starts /hour)	Moment of inertia Jx 10^{-4} Kgm^2	Max AC brake torque (Nm)	A-Sound pressure dB (A)	Weight (Kg)
2/12 pole						**S3 40%**								3000 / 500 r.p.m.
BADA 80 B2/12	0.45 0.07	2840 435	1.35 0.70	0.76 0.63	1.51 1.54	1.9 1.9	4.9 1.4	140	150	1700 24000	27.21	18	65 43	15.5
BADA 90 SB2/12	0.75 0.11	2800 400	2.10 1.05	0.82 0.61	2.56 2.63	3.0 2.0	5.2 1.4	300	150	1800 20000	26.15	38	72 44	22.5
BADA 90 LA2/12	1.10 0.15	2800 400	2.80 1.35	0.82 0.63	3.75 3.58	3.2 2.1	5.4 1.4	300	150	1800 20000	30.53	38	72 44	23
BADA 100 LB2/12	1.85 0.25	2850 410	4.1 2.2	0.87 0.52	6.20 5.82	3.0 2.2	6.3 1.5	300	150	1100 11000	60.07	50	73 47	36
BADA 112 MB2/12	3.00 0.45	2855 430	6.5 3.2	0.86 0.49	10.04 9.99	3.0 2.1	6.7 1.8	280	470	1200 10000	125.7	80	73 50	45
BADA 132 SB2/12	4.00 0.65	2880 450	8.9 4.8	0.85 0.56	13.26 13.79	3.0 1.8	7.0 1.6	580	680	350 2200	277.7	150	73 55	78
BADA 132 MA2/12	5.50 0.90	2870 450	11.5 6.7	0.88 0.56	18.30 19.10	3.0 1.8	7.5 1.6	580	680	350 2200	352.0	150	73 55	87
BADA 132 MB2/12	7.00 1.10	2880 450	15.7 8.5	0.85 0.56	23.21 23.34	3.0 1.8	7.5 1.6	580	680	350 2200	432.0	150	73 55	98
BADA 160 MB2/12	8.00 1.30	2890 470	15.9 9.5	0.92 0.42	26.44 26.41	3.0 2.0	8.0 2.1	1390	860	250 1200	683.0	190	74 58	154
BADA 160 LA2/12	11.00 1.80	2890 470	21.4 12.8	0.92 0.42	36.35 36.57	3.0 2.0	8.0 2.1	1390	860	250 1200	858.0	190	74 58	171
BADA 180 LB2/12	16.00 2.60	2910 470	30.6 12.2	0.93 0.46	52.51 52.83	3.0 1.8	8.0 2.0	950	1100	200 1000	1740.0	300	78 59	243

Hoisting motors 4/16 pole

Motor type	Power (kW)	rpm	In (A) 400 V	AC brake In (mA)
Service duty S4 (40% 4 pole - 25% 16 pole)				1500 / 375 r.p.m.
BAPKDA 132 MA4/16	2.8 / 0.7	1450 / 350	7.3 / 5.1	580
BAPKDA 132 MB4/16	4.0 / 1.1	1450 / 350	10.8 / 7.6	580
BAPDA 160 MA4/16	5.5 / 1.3	1420 / 335	11.6 / 8.0	1390
BAPDA 160 MB4/16	7.3 / 1.8	1420 / 330	16.2 / 11.4	1390
BAPDA 160 LB4/16	10.0 / 2.5	1420 / 330	22.2 / 15.9	1390
BAPDA 180 LA4/16	13.2 / 3.0	1450 / 350	25.0 / 21.7	950
BAPDA 200 LB4/16	16.0 / 4.0	1450 / 350	31.5 / 27.4	950
BAHPDA 225 S4/16	19.0 / 4.8	1470 / 360	38.2 / 28.0	2000
BAHPDA 225 M4/16	24.0 / 6.0	1470 / 360	47.3 / 34.7	2000
BAHPDA 250 M4/16	30.0 / 7.5	1465 / 360	58.7 / 43.3	2000
BAHPDA 280 S4/16	45.0 / 10.0	1475 / 365	83.0 / 75.0	2000
BAHPDA 280 M4/16	55.0 / 12.0	1475 / 365	100.0 / 90.0	2000

1. Motor characteristic values reported in the tables refer to 50 Hz frequency, ambient temperature max. 40 °C, altitude up to 1000 m. above sea level operating condition.
2. DC brake is provided on request only, on BA series motors . Brake current consumption values refer to a rated voltage of 3-phase 400V for AC brakes and single-phase 230V for DC brakes.
3. The table shows the sound pressure noise level, measured at one metre range from the motor according to the Acurve (ISO 1680). The shown noise levels refer to motor no-load operating condition and should be regarded with a tolerance of ± 3dB.
4. Max brake torque and Z_0 values refer to AC brake. Go to pag. 27 for DC max brake torque values.
5. The expressed Z_0 values refers to AC Brake. Z_0 is the max number of no-load starts. It is meant for calculation purposes only, and is used to obtain the max number of starts with load according to the formula expressed at page 26. The number of starts with load (Z_{load}) is indicative and it has to be operatively tested for confirmation. The use of Thermoprotectors is strongly recommended when the operative number of starts is close to the calculated Zload. It is necessary to verify the max permissible brake energy dissipation and the max permissible RPM.
6. The maximum brake torque for BAK 132 motors series is 120Nm.
7. MGM keeps the data provided as up-to-date and correct as possible. Since the products are subject to changes and improvements, the data indicated cannot be considered binding. The data indicated must also be understood as being general in nature. For specific applications, please contact the MGM staff.

Starting and braking time

Starting current for an asynchronous motor is always much higher than the nominal current. When the starting time is excessively long, there are electromechanical disturbances and higher temperatures on the windings, damaging the motor. For information on maximum starting time allowed for each type of motor, please contact MGM. An indicative value for starting time t_s (expressed in seconds) and the angle of rotation φ_a (expressed in radians) can be obtained as follows:

$$t_s = \frac{(J_{mot} + J_{app}) \bullet n}{9.55\ (T - T_{load})} \qquad \varphi_a = \frac{t_s \bullet n}{19.1}$$

Where J_{app} (Kgm_2) is the moment of inertia referred to the motor shaft, M_{load} (Nm) is the opposing torque to the motor, J_{mot} (Kgm^2) is the moment of inertia of the motor, n (RPM) is the rated motor RPM, T is the average starting torque, T=(0,8÷0,9)Ts (see the technical data table for J_{mot}, n and t_s of the selected motor).

An indicative braking time t_f (s) can be calculated as follows:

$$\frac{J_{tot} \bullet n}{9.55\ (T_b \pm T_{load})} + \frac{t_B}{1000}$$

where:
- J_{tot} total moment of inertia at the motor shaft (Kgm^2)
- n motor RPM (min^{-1})
- T_b brake torque (Nm)
- T_{load} resisting load torque (Nm) with **+** sign if matches the brake torque, or **-** sign if opposite
- t_B brake electrical reaction time (ms)

Brake electrical reaction time t_B (ms)

Motor type	AC Brake	DC Brake (Standard)	DC Brake (Quick)
BA 71-80-90	7	80	20
BA 100-112	9	80	30
BA 132-160	12	85	30
BA 180-200	12	90	30
BAH 225	14	100	35
BAH 250	14	-	-
BAH 280	14	-	-
BAH 315	14	-	-

The reported t_B times are valid only if the motor is connected with the brake in parallel. In case the brake is supplied separately, the t_B time has to be cut by 30-50%. This calculation gives an approximative indication. Please contact MGM for further information.

Brake disc linings wear

The indicative number of start/stop (N_{int}) that a brake motor can carry between two successive air gap adjustments can be calculated with the following formula:

$$N_{int} = E_r / W_f$$

where W_f (J) is the energy dissipated during a single braking action and E_r (MJ) is the value that can be obtained from the table below. The following formula can be used to calculate the W_f (J):

$$W_f\ (J) = 1/2\ I_{tot}\ \omega^2$$

where I_{tot} is the total moment of inertia (the motor moment of inertia plus the inertia to the motor shaft) and ω (rad/s) is the motor rotation speed. The table shows the E_r (MJ) values for the different frame sizes on the BA series motors with AC brake, BA series motors with DC brake, and BM series motors (DC brake standard). Multiply the values in the table by 0.5 in order to calculate the E_r (MJ) values for BAPV motors and take into account the additional moment of inertia introduced by the flywheel. Even for BMPV series motors please consider the additional moment of inertia introduced by the flywheel.

Motor type	71	80	90	100	112	132	160	180	200	225
BA with AC brake	56	80	95	105	130	200	290	385	385	462
BA with DC brake	34	48	57	63	78	120	174	231	231	277
BM	15	23	29	36	45	60	70	110	110	190

Values shown in the table must be considered as indicative only. In fact, the wear of the brake disc linings is influenced by various factors (brakes cycling, energy dissipated at each braking, environment condition, brake torque, etc.). The friction surfaces temperature grows both with the frequency of the braking actions and with the moment of inertia applied to the motor. When brake friction surface temperature is high, brake disc linings wear increases, causing a variation in the stopping times.
On BA series motors the cooling fan is located between the motor body and the brake. This arrangement allows cooling down both the motor frame and the brake friction surface resulting in a reduced brake disc lining wear and in steadier stopping times.
The brake lining wear is greater during the braking in period (a few thousand stops). This aspect has to be taken into consideration when experimentally calculating the interval time required between two consecutive air gap adjustments.

BA-BAX and BAH-BAHX dimensions

Tipo	71	80	90S****	90L	100L***	112M***	132S	132M	160M	160L	180L	200L**	225S	225M	250M	280S	280M	315S	315M
	BA-BAX												BAH-BAHX						
A	112	125	140	140	160	190	216	216	254	254	279	318	356	356	406	457	457	508	508
B	90	100	100	125	140	140	140	178	210	254	279	305	286	311	349	368	419	406	457
C	45	50	56	56	63	70	89	89	108	108	121	133	149	149	168	190	190	216	216
D*	14	19	24	24	28	28	38	38	42	42	48	55	60	60	65	75	75	80	80
d	M5	M6	M8	M8	M10	M10	M12	M12	M16	M16	M16	M20	M20	M20	M20	M20	M20	M20	M20
E*	30	40	50	50	60	60	80	80	110	110	110	110	140	140	140	140	140	170	170
Fa	9.5	11.5	11.5	11.5	14.5	14.5	14.5	14.5	18.5	18.5	18.5	18.5	18.5	18.5	18.5	18.5	18.5	24	24
Fb	M6	M6	M8	M8	M8	M8	M10	M10											
f	5	6	8	8	8	8	10	10	12	12	14	16	18	18	18	20	20	22	22
g	11	15.5	20	20	24	24	33	33	37	37	42.5	49	53	53	58	67.5	67.5	71	71
H	71	80	90	90	100	112	132	132	160	160	180	200	225	225	250	280	280	315	315
h	5	6	7	7	7	7	8	8	8	8	9	10	11	11	11	12	12	14	14
I	7	10	10	10	12	12	12	12	14.5	14.5	15	18.5	18	18	24	24	24	28	28
K	10.5	14	14	14	16	16	22	22	24	24	24	30	33	33	33	24	24	45	45
L	148	162	171	196															
L1	184	194	207	232	234	236	294	339	373	395	420	511	530	530	569	708	734	754.5	780
Ma	130	165	165	165	215	215	265	265	300	300	300	350	400	400	500	500	500	600	600
Mb	85	100	115	115	130	130	165	165											
Na	110	130	130	130	180	180	230	230	250	250	250	300	350	350	450	450	450	550	550
Nb	70	80	95	95	110	110	130	130											
Oa	3.5	3.5	3.5	3.5	4	4	4	4	5	5	5	5	5	5	5	5	5	6	6
Ob	2.5	3	3	3	3.5	3.5	3.5	3.5											
Pa	160	200	200	200	250	250	300	300	350	350	350	400	450	450	550	550	550	660	660
Pb	105	120	140	140	160	160	200	200											
Q	344	380	412	436	490	505	600	638	745	789	863	911	1032	1032	1135	1221	1275	1379	1430
$Q_{BAF/BAPV}$	368	403	436	460	511	531	628	666	778	822	907	932							
R	80	80	98.5	98.5															
R1	135	135	170	170	189	189	199	199	268	268	268	327	327	327	327	504	504	504	504
S	10	12	12	12	14	14	15	15	15	15	15	15	20	20	18	18	18	22	22
V	8	9.5	10.5	10.5	12.5	13.5	16	16	21	21	24	24	32	32	32	40	40	46	46
W	105	113	127	127															
W1	121	130	148	148	146	160	213	213	246	246	266	304	341	341	361	458	458	493	493
Y	145	160	180	180	198	223	265	265	315	315	357	357	437	437	489	489	489	489	489
Z	75	75	98.5	98.5															
Z1	86	86	112	112	104	104	151	151	167	167	167	202	202	202	202	282	282	282	282

* 225S-225M 2 poles D = 55 E = 110, 250M 2 poles D = 60 E = 140, 280S-280M 2 poles D = 65 E = 140, 315 2 poles D = 65 E = 140

** The dimensions indicated in the table refer to the BAX 200 series motor, the BA200 motors have the following dimensions: R1 = 268, L1 = 446, Q = 890, Z1 = 167, w1 = 266

*** Frame size 100-112 motors with double box and footmounted have the following dimensions: frame size100 (L1 = 254, R1 = 170, w1 = 162, Z1 = 112), frame size 112 (L1 = 262, R1 = 170, w1 = 176, Z1 = 112).

**** For 90S motors in the long casing version, consider the dimensions of the 90L column.

Notes		
	Q_{BAF} is the Q dimension for BAF series	
	Q_{BAPV} is the Q dimension for BAPV series	
	Cable glands are	M 20 on size 71 up to 80
		M 25 on size 90 up to 112
		M 32 on size 132
		M 40 on size 160 up to 200
		M 50 on size 225/250

Motors with the terminal board box on the side (left or right) are available on request. Please contact MGM for further information.

B5

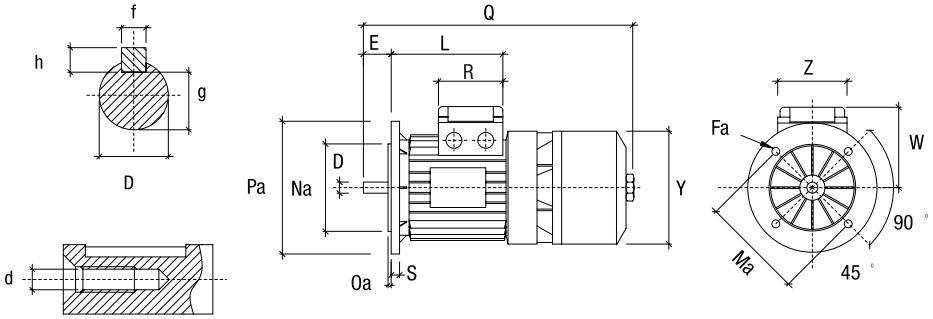

B14

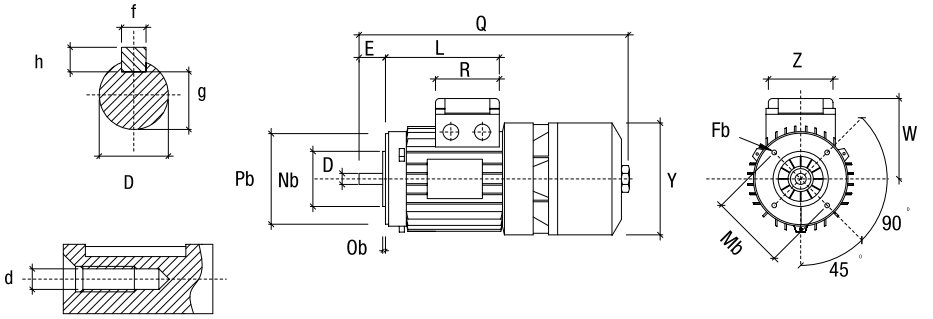

B3

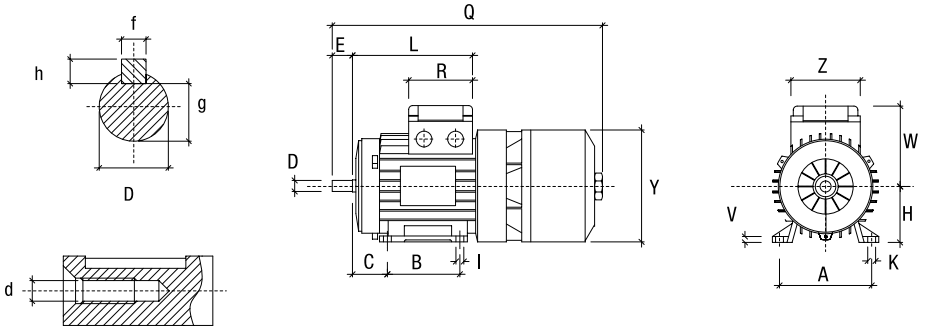

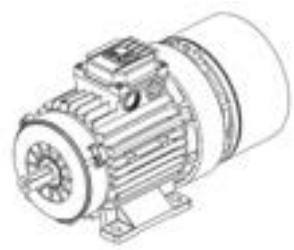

160÷315 B3

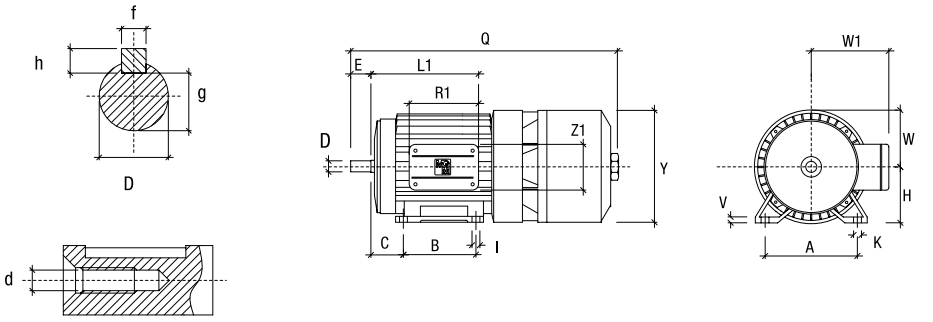

double terminal board box

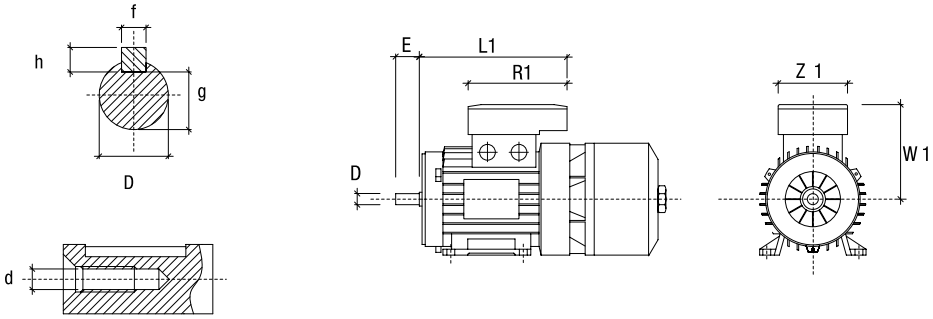

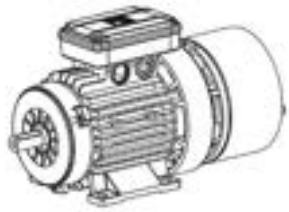

B5

B14

B3

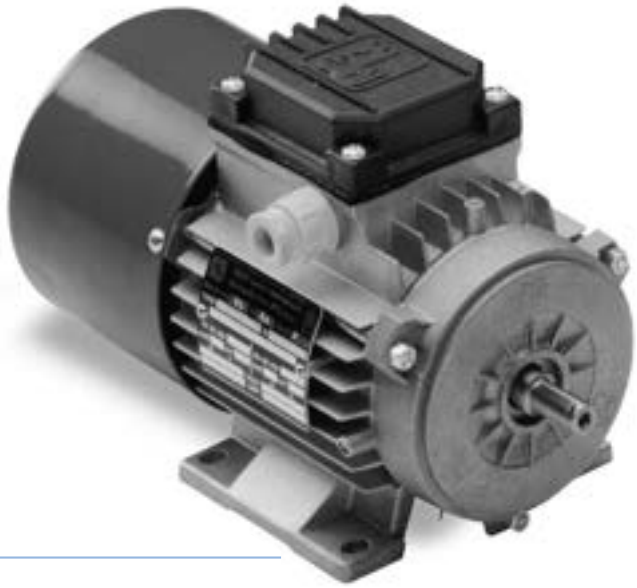

BM-BMX series

BM series consists of three phase, asynchronous brake motors. BM series range starts from 56 up to 225 frame size. As standard the brake is DC voltage supply with a built-in rectifier fitted inside the terminal box. The rectifier is provided with over-voltage protection devices. Two different types of rectifier wiring can be chosen according to two different brake intervention time. The motor brakes in case of power supply failure. The brake torque remains the same in both directions of rotation and the motor brakes without shaft axial sliding.
BM series is designed in order to have a braking action as quiet as possible. BM series motors tolerate a high overloading rate and are capable to withstand overheating so to guarantee best reliability also under tough operating conditions. In the technical data tables the motors of the BM series are proposed in the BMX version for continuous service with IE2 / IE3 efficiency class (compliant with EU regulation 2019/1781), alternatively they can be supplied in the version BM 'Enhanced Power' only for intermittent duty (S3 60%).All MGM motors have been designed to be controlled by inverters. The motor winding insulation is class F, while class H is available on request. Motor construction type is totally enclosed externally cooled (TEFC) and IP54 enclosure (IP55, IP56, IP65 and IP66 are available on request).
Motors up to 132 frame size are fitted as standard with a hexagonal hole on the shaft the at non drive end, to allow manual rotation, even if power is off. On request, BM series motors can be provided with a side manual brake release lever. The brake disc lining material is asbestos free and the lining mixture is formulated to have a high friction coefficient and a long life. BM series motor frame is made of die cast, light metal on motors up to 132 size and the terminal board box, provided with cable glands and plugs, is positioned 180° above the motor support feet. The frame is made of cast iron starting from 160 frame size and the terminal box is located on the right side (drive-end view). Shields and flanges are made of aluminium on motors up to 90 frame size, and of cast iron on motors of 100 frame size and above.
BM series main features are the low braking noise, gradual acceleration during the motor start and stop and reduced overall dimensions.

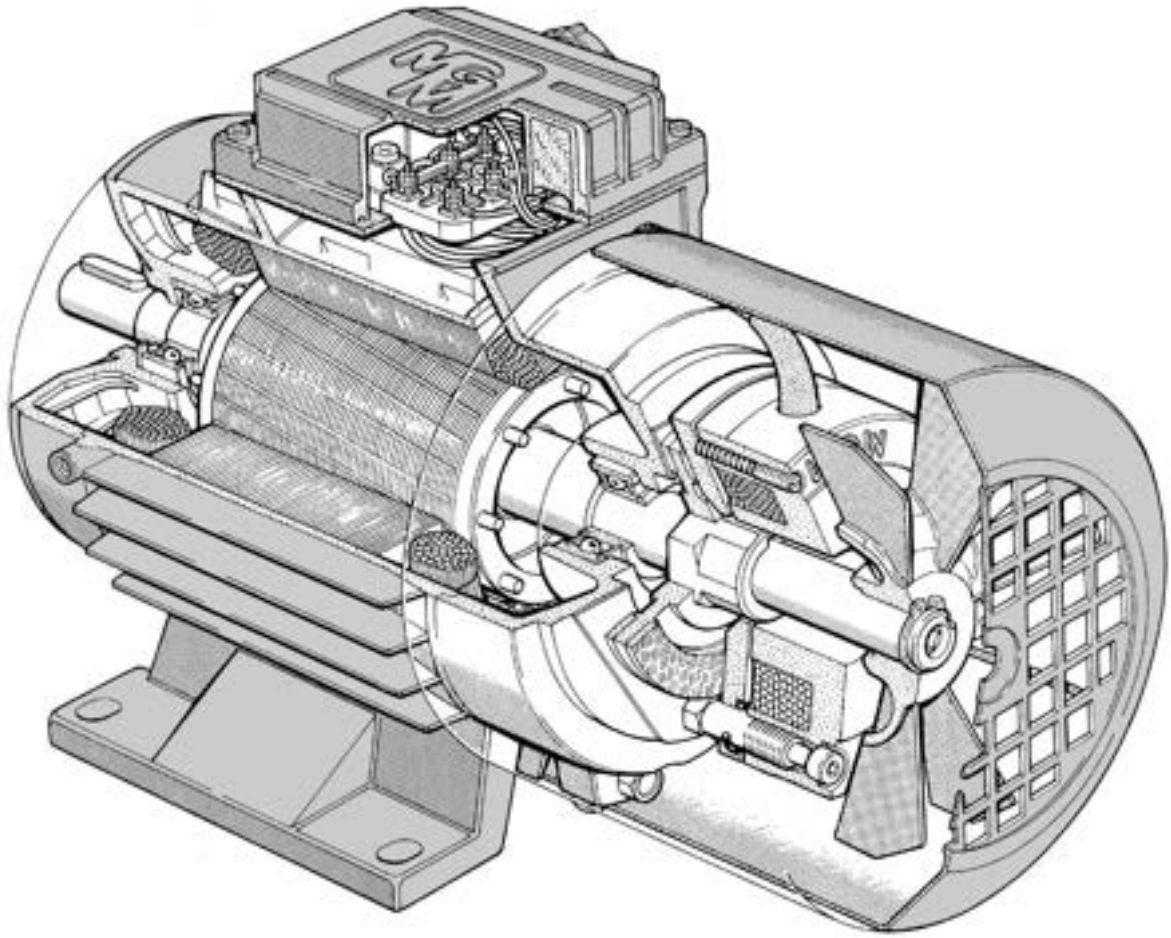

BM-BMX series brake group

General description

BM series motors are equipped with DC brake coil. DC brake coil is supplied through a rectifier located in the terminal box (standard voltage supply is 230V 50/60 Hz). The rectifier is provided with over-voltage protection devices. The brake torque remains the same in both directions of rotation and the motor brakes without shaft axial sliding. Brake torque can be set loosening or tightening the adjustable springs (78) where available or in the presence of fixed springs, removing the central springs or replacing the springs with ones of another type.
Never set the brake torque to a higher value than the one indicated on the motor nameplate. BM series motors are fitted as standard with a hexagonal hole on the shaft at non drive end to allow manual rotation. On request BM series motors can be provided with brake release return lever located on the motor side.

Air gap adjustment

The air gap (60), that is the distance between the two magnetic cores, the brake coil (75) and brake moving element (74), must stay within the value expressed in the chart below. It is advisable to check periodically the air gap because it increases as a consequence of the brake disc wear. In order to restore the air gap within the proper value, release the connecting screws (77), move the brake coil (75) towards the brake moving element (74) operating on the fixing screws (79). Once this operation has been settled be sure to tighten clockwise the connecting screws (77) so to fasten again the brake coil.

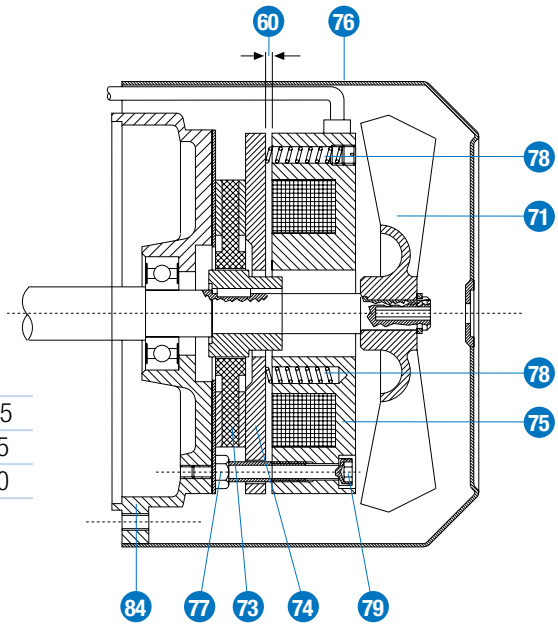

Frame Size	63/71	80	90	100	112	132	160	180	200	225
Min Air Gap [mm]	0.2	0.2	0.3	0.3	0.3	0.4	0.4	0.5	0.5	0.5
Max Air Gap [mm]	0.6	0.6	0.7	0.7	0.8	0.8	0.9	1.0	1.0	1.0

Permissible start frequency with load

The technical data tables provide the ideal no-load start frequency (Z_0). The permissible start frequency when an external load is applied (Z_{load}) can be calculated as follows:

$$Z_{load} = Z_0 \cdot K \cdot R$$

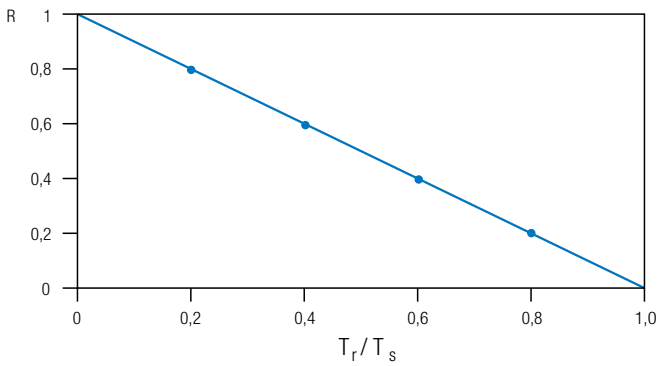

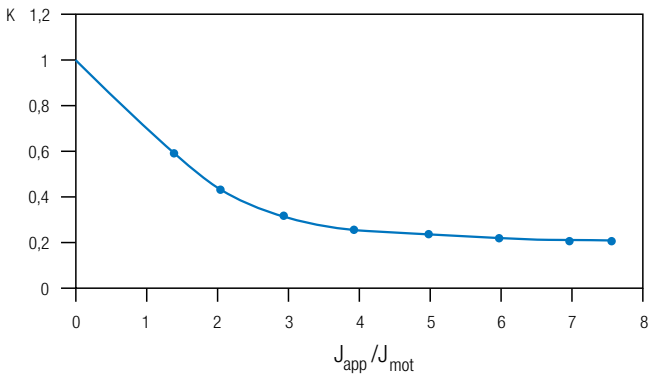

where "Z_0" is the table-value for the selected motor and "K" and "R" are factors determined by the curves shown above; the factor "K" refers to the calculated ratio between the moment of inertia of the applied load (J_{app}) and that of the motor (J_{mot}) while the factor "R" is the calculated ratio between the resisting torque (T_r) and the starting torque (T_s). This calculation gives an approximative indication and it has to be operatively tested for confirmation. If the required starting frequency is close to Z_{load}, it is advisable to use a motor equipped with thermal protectors. It is necessary to check the maximum energy dissipation limit of the brake group and the maximum motor RPM on those application where high moment of inertia is involved. Please contact MGM technical staff for additional information.

Rectifiers wiring diagram

BM series brake motors can be connected as diagram A or B according to the required braking time. MGM motors are always provided with the DC brake coil connected as diagram A. The DC brake coil has to be connected according to diagram B in order to have a quicker braking action. Here below brake intervention times and brake release times are provided.

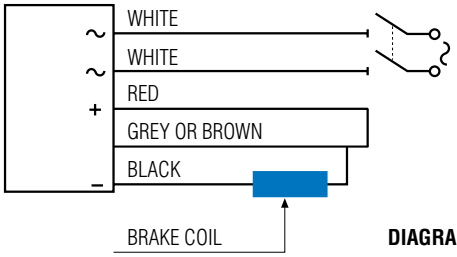

DIAGRAM A

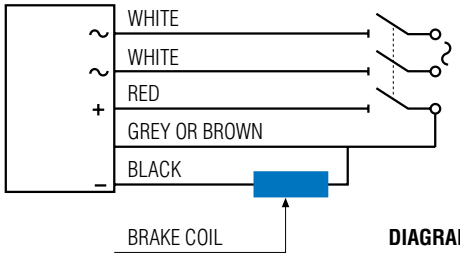

DIAGRAM B

The chart here below describes the trend of the braking torque as a function of time, during the start (on the left) and stop (on the right). The table below also show times for each type of motor and the values of Er (MJ) to calculate the number of braking actions between two consecutive air gap adjustments. Values shown in the table must be considered as indicative only, as they can be influenced by various factors (air gap, voltages, temperature, rectifier type, etc.). The values shown in the table are referred to the case when the brake supply line is separated from that of the motor.

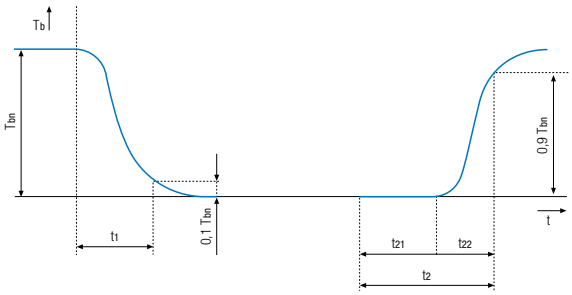

T_b	Brake torque
T_{bn}	Nominal brake torque
t_1	Switch-on time
t_{21}	Delay time
t_{22}	Rise time
t_2	Brake electrical reaction time

Frame size	t_1 (ms)	t_{21} quick (ms)	t_{22} quick (ms)	t_2 quick (ms)	t_{21} standard (ms)	t_{22} standard (ms)	t_2 standard (ms)	E_r (MJ)
56	30	10	15	25	35	25	60	7*
63	35	20	15	35	60	30	90	15
71	35	20	15	35	60	30	90	15
80	45	20	30	50	100	45	145	23
90	60	20	40	60	120	60	180	29
100	80	25	50	75	150	75	225	36
112	120	30	60	90	200	90	290	45
132	160	40	80	120	300	120	420	60
160	250	50	100	150	320	250	570	70
180	300	60	120	180	400	200	600	110
200	300	60	120	180	400	200	600	110
225	400	70	120	200	550	350	900	190

* Note: the air gap can't be restored on BM56 motors. The brake disc has to be replaced when the air gap exceed the stated value.

Braking time

The braking time t_f (s) can be calculated as follows: $t_f = \frac{J_{tot} \cdot n}{9.55\,(T_b \pm T_{load})} + \frac{t_2}{1000}$

where: J_{tot} total moment of inertia at the motor shaft (Kgm^2)

n motor RPM (min^{-1})

T_b brake torque (Nm)

T_{load} resisting load torque (Nm) with **+** sign if matches the brake torque, or **-** sign if opposite

t_2 brake electrical reaction time (ms)

technical data single speed motors - continuous duty (S1)

IE2/IE3 - Reg. (EU) 2019/1781 - 50Hz

Motor type	P_N (kW)	rpm	In (A) 400 V 50 Hz	cos φ	Cn (Nm)	Ca / Cn	Ia / In	IE	Efficiency 50Hz			Moment of inertia Jx10⁻⁴kgm²	Brake torque (Nm)	Weight (kg)
									100%	75%	50%			
2 pole - 3000 RPM														
BM 56 A2	0.09	2820	0.38	0.60	0.30	3	3.8	***	59.3	55	42	1.85	2	4
BMX 56 B2	0.12	2750	0.45	0.72	0.42	3	3.3	IE2	53.6	55	45	1.85	2	4
BMX 63 A2	0.18	2800	0.63	0.69	0.61	3	3.6	IE2	60.4	59.3	56.6	1.93	5	5
BMX 63 B2	0.25	2780	0.73	0.76	0.86	3.5	5	IE2	64.8	63.7	60.8	1.93	5	5
BMX 71 A2	0.37	2810	1.00	0.76	1.26	2.6	4.5	IE2	69.5	68.4	65.3	3.35	5	7
BMX 71 B2	0.55	2810	1.40	0.76	1.86	2.6	4.5	IE2	74.1	73	69.7	3.95	5	8
BMX 80A2	0.75	2849	1.74	0.77	2.52	3.6	5.7	IE3	80.7	80.2	76.6	7.29	10	12
BMX 80 B2	1.1	2865	2.50	0.77	3.66	3.3	5.4	IE3	82.7	83	80.9	8.61	10	13
BMX 90 SA2	1.5	2890	3.15	0.81	4.95	3.8	8.2	IE3	84.2	85.1	82.8	17.3	20	18
BMX 90 LA2	2.2	2887	4.95	0.75	7.27	4.4	8.4	IE3	85.9	85.7	84	19	20	22
BMX 100 LB2	3	2905	6.60	0.76	9.86	4.4	8.8	IE3	87.1	86.3	84.2	36.4	40	26
BMX 112 MC2	4	2935	7.80	0.84	13.00	4.6	10.5	IE3	88.1	88.5	87	83.7	60	40
BMX 132SA2	5.5	2935	10.1	0.88	17.89	4.3	9.5	IE3	89.2	89.6	87.4	190	100	65
BMX 132 SB2	7.5	2930	13.4	0.89	24.44	4.0	9	IE3	90.1	91	90	220	100	70
BMX 160 MA2	11	2956	20.5	0.85	35.53	4.5	10.2	IE3	91.2	91.9	90	480	150	148
BMX 160 MB2	15	2956	27.5	0.86	48.45	4.6	10.3	IE3	91.9	92	90.7	480	150	148
BMX 160 LA2	18.5	2956	33.8	0.86	59.76	4.6	10.3	IE3	92.4	92.6	91.6	580	150	160
BMX 180 LA2	22	2958	36.8	0.93	71.10	4.2	10.8	IE3	92.7	92	91	1050	250	245
BMX 200 LA2	30	2955	51.7	0.90	97.00	4.7	9.8	IE3	93.3	93.5	92.3	1400	250	280
BMX 200 LB2	37	2955	62.7	0.91	119.60	4.7	9.8	IE3	93.7	94	92.1	1400	250	280
4 pole - 1500 RPM														
BM 56 A4	0.06	1390	0.40	0.48	0.41	3	2.2	*	45	40.5	30	1.85	2	4
BM 56 B4	0.09	1320	0.41	0.61	0.65	3	2.2	*	55	50.6	38.6	1.85	2	4
BMX 63 A4	0.12	1300	0.36	0.73	0.82	2.2	2.8	IE2	59.1	59.8	54.1	2.47	5	4.5
BMX 63 B4	0.18	1340	0.58	0.70	1.28	2.2	2.8	IE2	64.7	62.5	51.4	3.08	5	5
BMX 63 C4	0.22	1350	0.70	0.69	1.55	2.6	3.6	IE2	67.1	67	66.4	3.55	5	5.5
BMX 71 A4	0.25	1400	0.76	0.69	1.70	2	3.6	IE2	68.5	66.3	61.4	5.67	5	7
BMX 71 B4	0.37	1375	1.00	0.74	2.62	2.2	3.9	IE2	72.7	73	70.3	6.57	5	8
BMX 71 C4	0.55	1360	1.43	0.72	3.86	2.4	4.2	IE2	77.1	78.2	75.1	8.39	5	9.5
BMX 80 A4	0.55	1410	1.41	0.72	3.7	2.4	4.3	IE2	77.1	76.4	73.5	13.5	10	13
BMX 80 S4	0.72	1400	1.90	0.70	4.98	2.9	5.3	IE2	79.6	79.5	78	13.5	10	13
BMX 80 B4	0.75	1415	1.97	0.67	5.06	3.1	5.6	IE3	82.5	82.8	81.2	14.5	10	14.5
BMX 90 SA4	1.1	1428	2.6	0.73	7.37	3.4	5.7	IE3	84.1	84.3	82.6	26	20	19
BMX 90 LA4	1.5	1430	3.5	0.74	10.01	3.5	6.2	IE3	85.3	85.2	83.6	30.2	20	21.5
BMX 100 S4 (*)(**)	1.85	1432	4.0	0.78	12.33	2.8	6.9	IE3	86.1	86.5	85.4	44.5	40	25
BMX 100 LA4	2.2	1440	4.8	0.76	14.5	2.9	7	IE3	86.7	87	85.4	53.4	40	29
BMX 112 MB4	3	1455	6.4	0.77	19.68	4	8.6	IE3	87.7	88.7	87.2	112	60	39
BMX 112 MC4	4	1445	8.4	0.77	26.4	3.7	7.1	IE3	88.6	88.8	87.6	155	60	44
BMX 132 SB4	5.5	1457	11	0.80	36.04	3.5	7.6	IE3	89.6	91.1	89.3	300	100	74
BMX 132 MA4	7.5	1457	14.9	0.82	49.15	3.3	7.9	IE3	90.4	90.7	90.2	350	100	81
BMX 160 MB4	11	1460	22.3	0.78	71.5	3.8	9.1	IE3	91.4	91.6	91	680	150	141
BMX 160 LA4	15	1470	30.2	0.78	97.44	3.5	9.1	IE3	92.1	92.3	91.8	850	150	160
BMX 180 LA4	18.5	1475	37.1	0.78	119.77	3.5	9.1	IE3	92.6	92.6	91.7	1750	250	250
BMX 180 LB4	22	1472	41.7	0.82	142.4	4.3	8.6	IE3	93	93	92	1750	250	250
BMX 200 LB4	30	1475	53.2	0.87	194.22	2.9	8.4	IE3	93.6	93.4	93.4	2700	250	275
BMX 225 S4	37	1480	66.2	0.86	238.73	2.7	8.5	IE3	93.9	94.4	91.9	4600	400	400
BMX 225 M4	45	1480	79.3	0.87	290.35	2.8	8.8	IE3	94.2	94.7	92.2	5050	400	415
BMX 250 M4	55	1480	96.6	0.87	354.88	3.2	9.8	IE3	94.6	95.1	92.6	7700	400	630
BMX 280 S4	75	1488	136.4	0.83	481.32	3.6	10.2	IE3	95	95.5	95	11000	1000	730
BMX 280 M4	90	1488	160.7	0.84	577.59	2.6	9.6	IE3	95.2	95.5	93.2	12600	1000	780
BMX 315 S4	110	1489	193.5	0.86	705.47	2.6	9.2	IE3	95.4	95.9	93.4	26500	1000	1120
BMX 315 M4	132	1489	231.7	0.86	846.57	2.7	9.2	IE3	95.6	96.1	93.6	30500	1000	1320

*** The EN 60034-30-1 standard specifies the IE efficiency classes for motors with power between 0.12 kw and 1000 kw. For motors with lower power it is therefore not possible to define the efficiency class, moreover these motors are outside the scope of the EU regulation 2019/1781.

IE2/IE3 - Reg. (EU) 2019/1781 - 50Hz

Motor type	P_N (kW)	rpm	In (A) 400 V 50 Hz	cos φ	Cn (Nm)	Ca / Cn	Ia / In	IE	Efficiency 50Hz			Moment of inertia $Jx10^{-4}kgm^2$	Brake torque (Nm)	Weight (kg)
									100%	75%	50%			
6 pole - 1000 RPM														
BM 56 B6	0.06	850	0.45	0.71	0.67	1.9	0.5	***	25.6	24.0	17.0	1.85	2	4
BM 63 C6	0.09	890	0.50	0.56	0.97	2.4	1.9	***	42.7	38.5	30.6	3.55	5	5.5
BMX 63 D6	0.12	865	0.62	0.55	1.3	2.7	1.9	IE2	50.6	50.4	48.5	3.83	5	6
BMX 71A6	0.18	900	0.61	0.69	2.1	2.0	2.6	IE2	56.6	56.7	52.8	10.0	5	8
BMX 71B6	0.25	875	0.80	0.70	2.8	1.6	2.8	IE2	61.6	62.1	57.4	10.0	5	9
BMX 80 A6	0.37	940	1.31	0.57	3.8	2.7	3.5	IE2	67.6	67.5	60.8	19.1	10	12
BMX 80 B6	0.55	920	1.72	0.63	5.7	2.8	3.5	IE2	73.1	72.8	69.2	22.9	10	13
BMX 90 SA6 **	0.75	935	2.1	0.66	7.66	2.5	5.5	IE3	78.9	79.3	77.1	40.0	20	17
BMX 90 LA6 **	1.1	935	3.3	0.61	11.23	3.1	4.6	IE3	81.0	81.4	79.2	48.1	20	20.5
BMX 100 LA6 **	1.5	955	4.00	0.66	15.2	3.0	5.3	IE3	82.5	82.1	79.1	92.6	40	28
BMX 112 MC6 **	2.2	960	5.00	0.75	21.88	2.4	6.4	IE3	84.3	84.4	82.5	195	60	44
BMX 132 SB6 **	3	965	6.80	0.75	29.68	3.1	8.1	IE3	85.6	85.8	83.8	305	100	66
BMX 132 MA6 **	4	965	9.20	0.72	39.58	3.1	6.7	IE3	86.8	88.2	87.1	361	100	71
BMX 132 MB6 **	5.5	965	12.50	0.72	54.42	3.0	6.6	IE3	88.0	88.2	86.6	468	100	82
BMX 160 MB6	7.5	965	15.80	0.76	74.21	3.0	7.2	IE3	89.1	89.3	88.2	1000	150	145
BMX 160 LB6	11	965	22.90	0.77	108.9	2.7	9.1	IE3	90.3	90.5	88.5	1250	150	170
BMX 180 LB6	15	978	31.30	0.76	147.7	3.1	9.1	IE3	91.2	91.2	90.0	2300	250	270
BMX 200 LA6	18.5	980	37.40	0.80	180.3	3.7	8.6	IE3	91.7	91.8	89.9	3200	250	275
BMX 200 LB6	22	975	43.10	0.80	215.5	3.1	7.3	IE3	92.2	92.3	90.4	3200	250	275
BMX 225 M6	30	985	57.90	0.80	291.4	3.7	7.7	IE3	92.9	93.2	92.9	7500	400	420
BMX 250 M6	37	980	68.20	0.84	360.5	3.2	7.9	IE3	93.3	93.4	91.5	9790	400	640
BMX 280 S6	45	987	88.80	0.78	436.3	2.8	6.0	IE3	93.7	93.8	91.9	16500	1000	720
BMX 280 M6	55	987	108.1	0.78	533.2	2.8	6.6	IE3	94.1	94.2	92.3	19500	1000	760
BMX 315 S6	75	988	141.3	0.81	724.9	2.6	7.0	IE3	94.6	94.7	92.8	33500	1000	1120
BMX 315 M6	90	988	169.0	0.81	869.9	2.6	7.0	IE3	94.9	95.0	93.1	51500	1000	1320
8 pole - 750 RPM														
BM 63 D8	0.07	650	0.45	0.62	1.03	2.2	1.6	***	28.0	27.0	19.0	3.83	5	6
BM 71 A8	0.08	660	0.60	0.53	1.16	2.0	2.0	***	42.9	38.6	30.7	5.67	5	7.5
BMX 71 B8	0.12	680	0.70	0.54	1.69	2.2	2.2	IE2	39.8	40.2	38.0	6.57	5	8
BMX 80 A8	0.18	690	0.86	0.60	2.49	2.2	2.4	IE2	45.9	46.3	44.1	19.1	10	12
BMX 80 B8	0.25	675	1.10	0.61	3.53	2.2	2.4	IE2	50.6	51.0	48.8	22.9	10	13
BMX 90 SA8	0.37	690	1.52	0.59	5.12	2.3	3.2	IE2	56.1	56.5	54.3	31.5	20	16.5
BMX 90 LA8	0.55	690	2.30	0.56	7.61	2.3	3.1	IE2	61.7	62.1	59.9	41.7	20	19
BMX 100 LA8	0.75	700	2.60	0.56	10.23	2.3	3.3	IE3	75.0	75.2	73.2	80.8	40	26
BMX 100 LB8	1.1	700	3.80	0.54	15.00	2.4	4.4	IE3	77.7	77.9	75.9	92.6	40	28
BMX 112 MB8	1.5	720	4.80	0.57	19.89	2.2	5.0	IE3	79.7	79.9	77.9	164	60	39
BMX 132 SB8	2.2	710	5.55	0.70	29.59	2.3	5.2	IE3	81.9	82.1	80.1	284	100	61
BMX 132 MB8	3	710	7.40	0.70	40.35	2.3	5.2	IE3	83.5	83.7	81.7	373	100	68
BMX 160 MA8	4	725	9.60	0.71	52.68	2.5	6.7	IE3	84.8	84.9	83.0	959	150	138
BMX 160 MB8	5.5	725	13.40	0.69	72.44	2.5	6.7	IE3	86.2	86.3	84.4	959	150	138
BMX 160 LA8	7.5	725	18.30	0.68	98.78	2.5	6.7	IE3	87.3	87.4	85.5	1280	150	156
BMX 180 LB8	11	730	26.10	0.69	143.89	2.4	5.7	IE3	88.6	88.7	86.8	2320	250	230
BMX 200 LA8	15	735	34.70	0.70	194.88	2.1	6.5	IE3	89.6	89.7	87.8	4400	250	275
BMX 225 S8	18.5	740	44.00	0.67	238.73	2.4	7.5	IE3	90.1	90.1	88.3	7130	400	405
BMX 225 M8	22	735	49.40	0.70	285.83	2.1	7.0	IE3	90.6	90.6	89.0	7130	400	415
BMX 250 M8	30	740	64.17	0.74	387.14	2.1	6.8	IE3	91.3	91.3	89.5	10200	400	640
BMX 280 S8	37	745	75.64	0.77	474.27	2.2	7.0	IE3	91.8	91.8	90.0	20000	1000	720
BMX 280 M8	45	745	90.42	0.78	576.82	2.2	7.2	IE3	92.2	92.2	90.4	23000	1000	760

*** The EN 60034-30-1 standard specifies the IE efficiency classes for motors with power between 0.12 kw and 1000 kw. For motors with lower power it is therefore not possible to define the efficiency class, moreover these motors are outside the scope of the EU regulation 2019/1781.

1. Motor characteristic values reported in the tables refer to continuous duty (S1), voltage 3~400V 50 Hz, ambient temperature max. 40 °C, altitude up to 1000 m above sea level operating condition.
2. The motors nameplates have the data relating to operation at both 50 Hz and 60 Hz with the same power value except for the motors marked with **.
3. BMX motor series have the same brake components as the BM with the same frame size, therefore the braking performance are the same.
4. Brake current consumption values refer to a rated voltage of 230V AC single-phase BMX motor series have the same brake components as the BM with the same frame size, therefore the braking performance are the same.
5. MGM keeps the data provided as up-to-date and correct as possible. Since the products are subject to changes and improvements, the data indicated cannot be considered binding. The data indicated must also be understood as being general in nature. For specific applications, please contact the MGM staff.
6. The motor marked with * can be supplied with reduced shaft and flange with the dimensions related to the frame size 90.

technical data two speed motors - single winding

Motor type	Power (kW)	rpm	In (A) 400 V	cos φ	Tn (Nm)	Ts / Tn	Is / In	DC brake In (mA)	Z_0 (starts /hour)	Moment of inertia Jx 10^{-4} Kgm^2	Brake torque (Nm)	A-Sound pressure dB (A)	Weight (Kg)
2/4 pole													3000 / 1500 r.p.m.
BMD 63 B2/4	0.22 0.15	2800 1400	0.80 0.75	0.68 0.56	0.75 1.02	3.00 3.00	4.5 3.2	200	5500 7000	3.08	5	55 42	5.0
BMD 63 C2/4	0.26 0.17	2800 1400	0.90 0.85	0.76 0.61	0.89 1.16	2.90 3.00	4.2 3.3	200	5000 6000	3.55	5	55 42	5.5
BMD 71 A2/4	0.25 0.18	2820 1415	0.75 0.70	0.73 0.66	0.85 1.21	2.2 2.4	3.8 3.1	200	2850 5500	5.67	5	59 45	7.0
BMD 71 B2/4	0.37 0.25	2820 1415	1.00 0.85	0.77 0.63	1.25 1.69	2.3 2.8	4.7 4.2	200	2850 5500	6.47	5	59 45	8.0
BMD 80 A2/4	0.65 0.45	2790 1400	1.80 1.35	0.81 0.72	2.22 3.07	2.0 2.1	4.1 4.0	160	2500 4400	10.62	10	65 47	12.0
BMD 80 B2/4	0.88 0.62	2800 1390	2.20 1.70	0.80 0.74	3.00 4.26	2.5 2.2	4.9 4.5	160	2500 4400	12.84	10	65 47	13.0
BMD 90 SB2/4	1.3 0.9	2800 1420	3.20 2.30	0.85 0.73	4.43 6.05	2.3 2.5	5.2 5.0	190	1650 2900	21.74	20	72 55	16.5
BMD 90 LA2/4	1.8 1.2	2800 1420	4.40 3.10	0.83 0.71	6.14 8.07	2.6 3.0	5.6 6.0	190	1200 2100	26.12	20	72 55	19.5
BMD 90 LB2/4	2.2 1.5	2860 1430	5.40 3.80	0.82 0.73	7.35 10.02	2.5 3.0	5.9 6.0	190	1050 1750	30.16	20	72 55	20.5
BMD 100 LA2/4	2.2 1.5	2875 1425	5.00 3.80	0.85 0.81	7.31 10.05	2.3 2.5	6.0 5.6	250	1050 1750	44.5	40	74 57	25
BMD 100 LB2/4	3.1 2.3	2875 1425	6.70 5.20	0.85 0.82	10.30 15.41	2.3 2.4	7.0 6.5	250	850 1400	53.4	40	74 57	29
BMD 112 MB2/4	4.5 3.3	2880 1400	9.20 6.90	0.88 0.86	14.92 22.51	2.4 2.6	7.0 6.5	470	350 1400	133.5	60	75 61	39
BMD 132 SB2/4	5.0 4.5	2940 1450	10.90 9.30	0.81 0.84	16.24 29.64	2.8 2.6	8.0 7.5	600	150 350	235.9	100	75 62	66
BMD 132 MA2/4	6.0 5.0	2940 1450	11.70 10.00	0.88 0.85	19.49 32.93	2.1 2.5	8.0 7.5	600	150 320	310.9	100	75 62	75
BMD 132 MB2/4	7.5 6.0	2940 1450	16.00 12.20	0.82 0.83	24.36 39.52	2.4 2.5	8.0 7.5	600	150 320	310.9	100	75 62	75
BMD 160 MA2/4	9.5 8.0	2870 1420	20.00 16.60	0.89 0.85	31.61 53.80	2.8 2.6	7.5 6.0	700	120 320	607.0	150	77 63	136
BMD 160 MB2/4	11.0 9.0	2870 1420	23.30 18.70	0.88 0.85	36.60 60.53	2.8 2.6	6.8 6.0	700	120 320	607.0	150	77 63	136
BMD 160 LA2/4	13.0 11.0	2890 1420	26.10 21.20	0.91 0.87	42.96 73.98	2.8 2.6	7.0 6.3	700	100 300	782.0	150	77 63	153
4/8 pole													1500 / 750 r.p.m.
BMD 71 A4/8	0.13 0.07	1385 700	0.35 0.45	0.82 0.60	0.90 0.96	1.6 1.8	3.0 2.0	200	4300 7300	8.55	5	45 43	8.0
BMD 71 B4/8	0.18 0.09	1370 685	0.50 0.60	0.83 0.59	1.25 1.25	1.8 2.0	3.2 2.0	200	4100 6900	10.01	5	45 43	8.5
BMD 71 C4/8	0.22 0.12	1370 685	0.60 0.75	0.83 0.59	1.53 1.67	1.6 1.8	3.0 2.0	200	3850 6700	10.82	5	45 43	9.0
BMD 80 A4/8	0.25 0.18	1405 675	0.70 0.90	0.86 0.65	1.70 2.55	2.2 2.0	4.1 2.4	160	4300 7300	19.05	10	47 45	12.0
BMD 80 B4/8	0.37 0.25	1405 675	0.85 1.15	0.86 0.65	2.51 3.54	2.2 2.0	4.1 2.4	160	3250 5500	22.86	10	47 45	13.0
BMD 90 SA4/8	0.75 0.37	1350 695	1.70 1.80	0.85 0.53	5.31 5.08	1.8 2.3	3.9 2.7	190	3200 5500	31.52	20	55 46	16.5
BMD 90 LB4/8	1.1 0.6	1390 695	2.70 3.00	0.82 0.53	7.56 8.24	2.0 2.5	4.5 2.7	190	2900 4900	48.21	20	55 46	20.5
BMD 100 LB4/8	1.6 0.9	1395 700	3.60 3.50	0.87 0.58	10.95 12.28	2.0 2.2	5.0 3.5	250	1850 3100	92.55	40	57 49	28
BMD 112 MB4/8	2.2 1.2	1440 720	4.80 4.60	0.86 0.57	14.59 15.92	2.5 3.1	5.5 4.1	470	1400 3000	200.60	60	61 52	39
BMD 132 SB4/8	3.0 2.0	1440 720	6.60 5.80	0.85 0.64	19.90 26.53	2.2 2.5	6.0 5.0	600	380 750	283.90	100	62 55	61
BMD 132 MA4/8	4.0 2.7	1440 720	8.80 7.80	0.85 0.64	26.53 35.81	2.2 2.5	6.0 5.0	600	380 750	372.70	100	62 55	68
BMD 132 MB4/8	6.0 4.0	1440 720	13.00 11.60	0.85 0.64	39.79 53.06	2.2 2.5	6.0 5.0	600	380 750	533.70	100	62 55	106
BMD 160 MB4/8	6.5 4.5	1470 730	15.10 13.30	0.80 0.62	42.23 58.87	2.6 2.5	2.4 5.0	700	320 580	959.00	150	63 58	138
BMD 160 LA4/8	9.5 6.0	1470 730	21.50 17.60	0.82 0.62	61.72 78.49	2.6 2.4	8.0 6.5	700	300 560	1280.00	150	63 58	156

technical data two speed motors - two windings

Motor type	Power (kW)	rpm	In (A) 400 V	cos φ	Tn (Nm)	Ts / Tn	Is / In	DC brake In (mA)	Z_0 (starts /hour)	Moment of inertia Jx 10^{-4} Kgm^2	Brake torque (Nm)	A-Sound pressure dB (A)	Weight (Kg)
2/6 pole											3000 / 1000 r.p.m.		
BMDA 71 B2/6	0.25 0.08	2880 940	0.85 0.60	0.74 0.64	0.83 0.81	2.6 2.2	4.3 2.0	200	7300 14400	6.57	5	59 45	8.5
BMDA 71 C2/6	0.35 0.10	2880 940	1.05 0.60	0.75 0.59	1.16 1.02	2.6 2.2	5.0 2.3	200	6850 13500	7.90	5	59 45	9.5
BMDA 80 A2/6	0.37 0.12	2885 945	1.35 0.80	0.67 0.57	1.22 1.21	2.6 1.9	5.0 2.5	160	4150 11000	10.62	10	65 47	12.0
BMDA 80 B2/6	0.55 0.18	2885 945	1.75 1.05	0.67 0.57	1.82 1.82	2.6 1.9	5.0 2.5	160	3100 9200	12.84	10	65 47	13.0
BMDA 90 SA2/6	0.9 0.3	2875 950	2.10 1.15	0.86 0.65	2.99 3.02	2.5 2.2	5.0 2.5	190	2300 6850	21.74	20	72 54	16.5
BMDA 90 LA2/6	1.2 0.4	2875 950	2.80 1.55	0.86 0.65	3.99 4.02	2.5 2.2	5.0 2.5	190	2000 5450	26.12	20	72 54	19.5
BMDA 90 LB2/6	1.4 0.5	2890 940	3.20 1.80	0.86 0.55	4.63 5.08	2.7 2.5	5.0 3.0	190	1650 4100	30.16	20	72 54	20.5
BMDA 100 LA2/6	1.6 0.6	2810 900	3.70 1.90	0.85 0.68	5.44 6.37	2.6 2.3	5.4 3.4	250	1650 4100	44.50	40	74 56	25
BMDA 100 LB2/6	2.2 0.8	2800 910	4.80 2.50	0.90 0.67	7.50 8.40	2.6 2.3	5.4 3.4	250	1550 3650	53.43	40	74 56	28
BMDA 112 MB2/6	3.0 1.0	2870 950	6.40 3.20	0.86 0.61	9.98 10.05	3.0 3.2	7.0 4.5	470	450 3250	133.50	60	75 58	26
BMDA 132 SB2/6	4.0 1.3	2880 940	8.90 3.70	0.85 0.69	13.26 13.21	3.0 2.8	7.0 4.5	600	150 650	235.90	100	75 58	66
BMDA 132 MA2/6	5.5 1.8	2870 940	11.50 5.10	0.88 0.69	18.30 18.29	3.0 2.8	7.5 4.5	600	150 550	310.90	100	75 58	75
BMDA 132 MB2/6	7.0 2.2	2870 940	14.90 6.30	0.88 0.69	23.29 22.35	3.0 2.8	7.5 4.5	600	150 450	391.30	100	75 58	76
BMDA 160 MB2/6	8.0 2.5	2890 950	15.90 6.90	0.92 0.74	26.44 25.13	3.0 2.0	8.0 4.3	700	100 400	607.00	150	77 59	136
BMDA 160 LA2/6	11.0 3.6	2890 950	21.40 9.30	0.92 0.74	36.35 36.19	3.0 2.0	8.0 4.3	700	100 360	782.00	150	77 59	153
2/8 pole											3000 / 750 r.p.m.		
BMDA 63 C2/8	0.18 0.04	2850 635	0.60 0.45	0.78 0.70	0.60 0.60	2.2 1.9	5.0 2.1	200	2500 1800	3.55	5	55 42	5.5
BMDA 71 B2/8	0.25 0.06	2900 700	0.85 0.55	0.69 0.54	0.82 0.82	2.5 1.8	4.0 1.5	200	7300 17500	6.57	5	59 43	8.5
BMDA 71 C2/8	0.35 0.07	2900 700	1.05 0.75	0.70 0.52	1.15 0.96	2.5 2.2	4.3 1.6	200	6150 14400	7.90	5	59 43	9.5
BMDA 80 A2/8	0.37 0.09	2885 690	1.35 0.70	0.67 0.54	1.22 1.25	2.3 1.8	5.0 1.7	160	4100 13500	10.62	10	65 45	12.0
BMDA 80 B2/8	0.55 0.12	2885 690	1.75 0.90	0.67 0.54	1.82 1.66	2.3 2.0	5.0 1.7	160	3100 12750	12.84	10	65 45	13.0
BMDA 90 SB2/8	0.75 0.18	2800 610	1.90 1.05	0.77 0.65	2.56 2.82	3.0 2.1	5.1 1.9	190	1950 9250	21.74	20	72 46	16.5
BMDA 90 LA2/8	1.10 0.25	2800 640	2.70 1.45	0.80 0.64	3.75 3.73	3.0 2.1	5.1 1.9	190	1750 7750	26.12	20	72 46	19.5
BMDA 90 LB2/8	1.3 0.3	2820 640	3.10 1.75	0.81 0.58	4.40 4.48	3.2 2.4	5.7 2.0	190	1650 7250	30.16	20	72 46	20.5
BMDA 100 LA2/8	1.6 0.4	2810 660	3.70 2.00	0.85 0.58	5.44 5.79	2.7 2.0	5.3 2.2	250	1650 5750	44.50	40	73 49	25
BMDA 100 LB2/8	2.2 0.5	2800 660	4.80 2.50	0.90 0.59	7.50 7.23	2.8 2.3	5.7 2.3	250	1550 5100	53.43	40	73 49	29
BMDA 112 MB2/8	3.0 0.8	2860 690	6.30 3.50	0.87 0.63	10.02 11.07	3.3 2.6	7.5 3.2	470	650 4200	133.50	60	75 61	39
BMDA 132 SB2/8	4.0 1.1	2880 680	8.90 4.00	0.85 0.60	13.26 15.45	3.0 1.9	7.0 3.3	600	260 1100	235.90	100	75 62	66
BMDA 132 MA2/8	5.5 1.5	2870 680	11.50 5.60	0.88 0.59	18.30 21.07	3.0 2.0	7.5 3.0	600	250 1100	310.90	100	75 62	75
BMDA 132MB2/8	7.0 1.8	2870 680	14.90 7.30	0.88 0.59	23.29 25.28	3.0 2.0	7.5 3.0	600	250 1100	391.30	100	75 62	86
BMDA 160 MB2/8	8.0 2.2	2880 705	16.70 7.60	0.91 0.65	26.53 29.80	3.0 1.9	8.0 3.3	700	180 900	607.00	150	77 58	136
BMDA 160 LA2/8	11.0 3.0	2880 710	21.50 10.20	0.92 0.95	36.48 40.35	3.0 1.9	8.0 3.3	700	180 900	782.00	150	77 58	153

1. Motor characteristic values reported in the tables refer to continuous duty (S1), 50 Hz frequency, ambient temperature max. 40 °C, altitude up to 1000 m. above sea level operating condition.
2. The expressed brake torque is the max admissible one. Brake current consumption values refer to a rated voltage of 230V AC single-phase.
3. The table shows the sound pressure noise level, measured at one metre range from the motor according to the Acurve (ISO 1680). The shown noise levels refer to motor no-load operating condition and should be regarded with a tolerance of ± 3dB.
4. The brake torque indicated on the chart is the maximum one that can be reached.
5. Z_0 is the max number of no-load starts. It is meant for calculation purposes only, and is used to obtain the max number of starts with load according to the formula expressed at page 42. The number of starts with load (Z_{load}) is indicative and it has to be operatively tested for confirmation. The use of thermal protectors is strongly recommended when the operative number of starts is close to the calculated Z_{load}. It is necessary to verify the max permissible brake energy dissipation and the max permissible RPM for applications with high moment of inertia.
6. MGM keeps the data provided as up-to-date and correct as possible. Since the products are subject to changes and improvements, the data indicated cannot be considered binding. The data indicated must also be understood as being general in nature. For specific applications, please contact the MGM staff.

technical data two speed motors - two windings

Motor type	Power (kW)	rpm	In (A) 400 V	cos φ	Tn (Nm)	Ts / Tn	Is / In	DC brake In (mA)	Z_0 (starts /hour)	Moment of inertia Jx 10^{-4} Kgm^2	Brake torque (Nm)	A-Sound pressure dB (A)	Weight (Kg)
4/6 pole													1500 / 1000 r.p.m.
BMDA 71 C4/6	0.18 0.11	1415 930	0.60 0.50	0.76 0.66	1.21 1.13	1.9 2.0	3.0 2.3	200	14500 19500	10.82	5	45 45	8.5
BMDA 80 A4/6	0.25 0.18	1430 930	0.85 0.80	0.79 0.71	1.67 1.85	2.2 1.8	4.3 3.0	160	8250 11500	19.05	10	47 47	12.0
BMDA 80 B4/6	0.37 0.25	1430 930	1.05 0.95	0.79 0.71	2.47 2.57	2.2 1.8	4.3 3.0	160	1300 10300	22.86	10	47 47	13.0
BMDA 90 SA4/6	0.55 0.37	1420 950	1.60 1.45	0.78 0.62	3.70 3.72	1.9 2.1	3.8 3.3	190	6900 9750	31.52	20	55 54	16.5
BMDA 90 LB4/6	0.75 0.55	1420 950	2.20 1.90	0.78 0.62	5.04 5.53	2.0 2.1	3.8 3.3	190	5700 8200	41.67	20	55 54	19.5
BMDA 100 LA4/6	1.1 0.8	1445 955	3.00 2.40	0.76 0.71	7.27 8.00	2.0 2.1	5.3 4.4	250	3100 4400	80.76	40	57 56	26
BMDA 100 LB4/6	1.5 1.1	1440 950	3.90 3.30	0.75 0.68	9.95 11.06	2.0 2.1	5.2 4.4	250	3000 4200	92.55	40	57 56	28
BMDA 112 MB4/6	2.0 1.3	1385 930	4.40 3.50	0.88 0.75	13.79 13.35	2.6 2.1	5.3 4.4	470	1550 3300	200.60	60	75 61	39
BMDA 132 SB4/6	2.2 1.5	1440 950	5.10 4.40	0.78 0.69	14.59 15.08	2.9 2.6	7.0 5.5	600	360 600	304.90	100	75 62	66
BMDA 132 MA4/6	3.0 2.2	1440 950	6.40 6.00	0.81 0.71	19.90 22.12	2.7 2.4	7.0 5.0	600	360 600	360.70	100	75 62	71
BMDA 132 MB4/6	3.7 2.5	1440 950	8.20 7.00	0.78 0.69	24.54 25.13	2.9 2.6	7.0 5.5	600	300 550	467.70	100	75 62	82
BMDA 160 MB4/6	5.5 3.7	1390 940	11.10 8.90	0.93 0.81	37.79 37.59	2.5 2.3	5.8 5.2	700	240 420	867.00	150	63 59	138
BMDA 160 LB4/6	7.5 5.0	1390 940	15.20 12.20	0.93 0.81	51.53 50.80	2.5 2.3	6.0 5.2	700	240 420	1160.00	150	63 59	156
4/12 pole						**S3 40%**							1500 / 500 r.p.m.
BMDA 80 A4/12	0.25 0.05	1425 435	0.85 0.60	0.77 0.663	1.68 1.10	1.8 1.9	3.7 1.6	160	4300 8000	19.05	10	47 43	12.0
BMDA 80B4/12	0.37 0.07	1425 435	1.05 0.75	0.77 0.63	2.48 1.54	1.8 1.9	3.7 1.6	160	4200 8000	22.86	10	47 43	13.0
BMDA 90 SA4/12	0.40 0.13	1360 380	1.25 1.05	0.73 0.59	2.81 3.27	2.5 2.0	3.5 1.6	190	3200 6100	31.52	20	55 44	16.5
BMDA 90 LA4/12	0.55 0.18	1400 400	1.65 1.20	0.76 0.64	3.75 4.30	2.5 1.8	3.5 1.6	190	3000 5900	41.67	20	55 44	19.5
BMDA 90 LB4/12	0.75 0.22	1370 400	2.05 1.60	0.76 0.65	5.23 5.25	2.5 2.0	3.5 1.6	190	2850 5700	48.21	20	55 44	20.5
BMDA 100 LA4/12	0.90 0.25	1440 450	2.30 2.10	0.76 0.50	5.97 5.31	2.2 1.8	5.3 1.7	250	1950 4700	80.76	40	57 47	26
BMDA 100 LB4/12	1.10 0.35	1440 450	2.80 2.60	0.76 0.50	7.30 7.43	2.2 1.8	5.3 1.7	250	1850 4500	92.55	40	57 47	28
BMDA 112 MB4/12	1.50 0.45	1420 440	3.40 2.40	0.84 0.55	10.09 9.77	2.2 2.0	6.0 2.2	470	780 4300	200.60	60	75 61	39
BMDA 132 SA4/12	2.50 0.80	1440 440	5.40 3.80	0.81 0.53	16.58 17.36	2.7 1.6	7.0 2.4	600	400 1100	304.90	100	75 62	67
BMDA 132 MA4/12	3.00 1.00	1440 440	6.40 4.50	0.81 0.53	19.90 21.70	2.7 1.6	7.0 2.4	600	400 1100	360.70	100	75 62	71
BMDA 132 MB4/12	4.00 1.30	1140 440	8.50 5.90	0.81 0.55	33.51 28.22	2.7 1.6	7.0 2.4	600	400 1100	467.70	100	75 62	82
BMDA 160 MB4/12	4.80 1.60	1425 455	10.00 7.20	0.89 0.57	32.17 33.58	2.8 2.0	7.5 3.0	700	300 850	867.00	150	63 61	138
BMDA 160 LB4/12	7.30 2.40	1410 445	15.20 10.10	0.90 0.61	49.44 51.51	2.8 2.0	7.0 3.0	700	300 850	1160.00	150	63 61	156

1. Motor characteristic values reported in the tables refer to continuous duty (S1), except for 4/12 pole motors, 50 Hz frequency, ambient temperature max. 40 °C, altitude up to 1000 m. above sea level operating condition.
2. The expressed brake torque is the max admissible one. Brake current consumption values refer to a rated voltage of 230V AC single-phase.
3. The table shows the sound pressure noise level, measured at one metre range from the motor according to the Acurve (ISO 1680). The shown noise levels refer to motor no-load operating condition and should be regarded with a tolerance of ± 3dB.
4. The brake torque indicated on the chart is the maximum one that can be reached.
5. Z_0 is the max number of no-load starts. It is meant for calculation purposes only, and is used to obtain the max number of starts with load according to the formula expressed at page 42. The number of starts with load (Z_{load}) is indicative and it has to be operatively tested for confirmation. The use of thermal protectors is strongly recommended when the operative number of starts is close to the calculated Z_{load}. It is necessary to verify the max permissible brake energy dissipation and the max permissible RPM for applications with high moment of inertia.
6. MGM keeps the data provided as up-to-date and correct as possible. Since the products are subject to changes and improvements, the data indicated cannot be considered binding. The data indicated must also be understood as being general in nature. For specific applications, please contact the MGM staff.

Size	56	63	71	80	90S	90L	100L	112M	132S	132M	160M	160L	180	200**	225S	225M
A	90	100	112	125	140	140	160	190	216	216	254	254	279	318	356	356
B	71	80	90	100	100	125	140	140	140	178	210	254	279	305	286	311
C	36	40	45	50	56	56	63	70	89	89	108	108	121	133	149	149
D	9	11	14	19	24	24	28	28	38	38	42	42	48	55	60	60
d	M3	M4	M5	M6	M8	M8	M10	M10	M12	M12	M16	M16	M16	M20	M20	M20
E	20	23	30	40	50	50	60	60	80	80	110	110	110	110	140	140
Fa	6.6	9.5	9.5	11.5	11.5	11.5	14.5	14.5	14.5	14.5	18.5	18.5	18.5	18.5	18.5	18.5
Fb	M5	M5	M6	M6	M8	M8	M8	M8	M10	M10	-	-	-	-	-	-
f	3	4	5	6	8	8	8	8	10	10	12	12	14	16	18	18
g	7.2	8.5	11	15.5	20	20	24	24	33	33	37	37	42.5	49	53	53
H	56	63	71	80	90	90	100	112	132	132	160	160	180	200	225	225
h	3	4	5	6	7	7	7	7	8	8	8	8	9	10	11	11
I	6	7	7	10	10	10	12	12	12	12	14.5	14.5	14.5	18.5	18	18
K	11	10.5	10.5	14	14	14	16	16	22	22	24	24	24	30	18	18
L	99	130	145	162	171	196	-	-	-	-	-	-	-	-	-	-
L1	173	166	182	194	207	232	254	262	294	339	373	395	420,5	511	530	530
Ma	100	115	130	165	165	165	215	215	265	265	300	300	300	350	400	400
Mb	65	75	85	100	115	115	130	130	165	165	-	-	-	-	-	-
Na	80	95	110	130	130	130	180	180	230	230	250	250	250	300	350	350
Nb	50	60	70	80	95	95	110	110	130	130	-	-	-	-	-	-
Oa	3	3	3.5	3.5	3.5	3.5	4	4	4	4	5	5	5	5	5	5
Ob	2.5	2.5	2.5	3	3	3	3.5	3.5	3.5	3.5	-	-	-	-	-	-
Pa	120	140	160	200	200	200	250	250	300	300	350	350	350	400	450	450
Pb	80	90	105	120	140	140	160	160	200	200	-	-	-	-	-	-
Q	230	260	295	334	360	385	435	470	565	604	716	760	863	869	950	950
R	75	80	80	80	98.5	98.5	-	-	-	-	-	-	-	-	-	-
R1	138	135	135	135	170	170	170	170	199	199	268	268	268	327	327	327
S	8	10	10	12	12	12	14	14	15	15	15	15	19,5	15	20	20
V	7	7	8	9.5	10.5	10.5	12.5	13.5	16	16	21	21	24	24	32	32
W	93	97	105	113	127	127	-	-	-	-	-	-	-	-	-	-
W1	106	111	121	130	148	148	162	176	258	258	309.5	309.5	269.5	304	324	324
Y	110	121	136	153	178	178	198	219.5	255	255	293	293	355	386	433	433
Z	75	75	75	75	98.5	98.5	-	-	-	-	-	-	-	-	-	-
Z1	95	86	86	86	112	112	112	112	151	151	167	167	167	202	202	202

B3

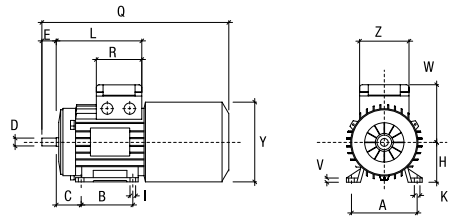

B5

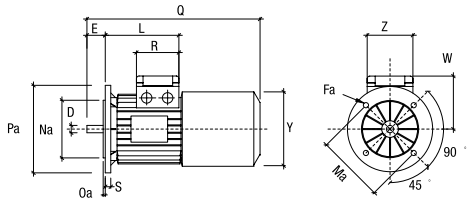

B14

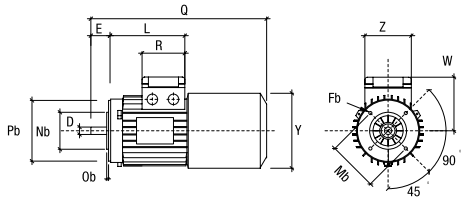

Double Terminal Board Box

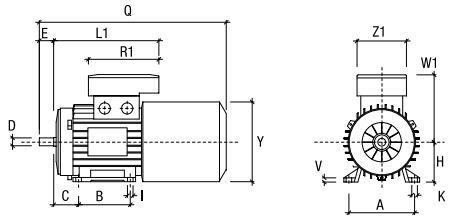

160÷225 B3

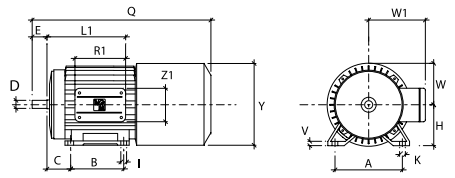

* 225S-225M 2 pole D=55 E=110
** BM200 motors have the following dimensions: R1 = 268, L1 = 446, Q = 893, Z1 = 167, W1 = 269.5, Y = 355

Shaft End

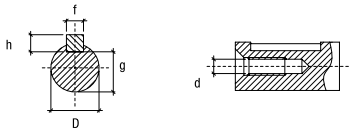

Notes	Cable glands are	M 16 on size 56 up to 63
		M 20 on size 71 up to 80
		M 25 on size 90 up to 112
		M 32 on size 132
		M 40 on size 160 up to 200
		M 50 on size 225

BA - BM Enhanced Power (EP) series- Intermittent duty S3 60%

The BA and BM brake motors are available in the EP 'Enhanced Power' version. These motors can supply the indicated power in the tables below only in intermittent duty (S3 60%), they cannot work in continuous duty (S1). Even the motors of the BAH series are available in the EP version, starting from size 80.
The brake assembly of the BA, BM, BAH motors in the EP version remains the same as that used on the corresponding type of motor for continuous duty (BAX, BMX, BAHX series).

Motor type	Power (kW) S3 60%	In(A) 400V 50Hz	cos φ	Tn (Nm)	rpm	BA Max Brake torque (Nm)	BM Brake torque (Nm)
2 pole							
56 B2	0.16	0.49	0.80	0.58	2650	-	2
63 A2	0.24	0.72	0.80	0.85	2700	-	5
63 B2	0.30	0.85	0.85	1.09	2630	-	5
63 C2	0.50	1.33	0.89	1.85	2580	-	5
71 A2	0.50	1.21	0.85	1.73	2760	14	5
71 B2	0.70	1.68	0.86	2.42	2760	14	5
71 C2	0.92	2.15	0.85	3.16	2765	14	5
80 A2	0.92	2.01	0.90	3.20	2730	18	10
80 B2	1.35	2.97	0.90	4.74	2720	18	10
80 C2	1.80	3.85	0.86	6.23	2759	18	10
90 SA2	1.80	4.03	0.88	6.27	2740	38	20
90 LA2	2.70	5.67	0.90	9.38	2750	38	20
100 LA2	3.60	7.47	0.86	12.19	2820	50	40
112 MB2	4.88	10.13	0.87	16.29	2860	80	60
112 MC2	6.60	13.06	0.88	21.96	2870	80	60
132 SA2	6.90	13.35	0.90	23.12	2850	150	100
132 SB2	9.00	17.19	0.89	29.95	2870	150	100
132 MA2	11.00	20.77	0.89	36.22	2900	150	100
132 MB2	13.20	24.42	0.93	43.92	2870	150	100
160 MA2	13.40	23.66	0.93	43.97	2910	190	150
160 MB2	18.30	32.68	0.93	60.26	2900	190	150
160 LA2	22.60	40.36	0.93	74.17	2910	190	150
180 LA2	28.60	51.08	0.93	93.5	2920	300	250
200 LA2	39.00	70.41	0.92	128.0	2910	300	250
200 LB2	48.10	85.08	0.92	157.6	2915	300	250

BA - BM Enhanced Power (EP) series- Intermittent duty S3 60%

Motor type	Power (kW) S3 60%	In(A) 400V 50Hz	cos φ	Tn (Nm)	rpm	BA Max Brake torque (Nm)	BM Brake torque (Nm)
4 pole							
63 A4	0.15	0.60	0.80	1.30	1100	-	5
63 B4	0.23	0.78	0.73	1.65	1300	-	5
63 C4	0.26	0.81	0.89	1.92	1310	-	5
63 D4	0.37	1.24	0.85	2.96	1180	-	5
71 A4	0.33	0.94	0.81	2.33	1330	14	5
71 B4	0.5	1.37	0.79	3.48	1320	14	5
71 C4	0.7	1.97	0.82	5.29	1290	14	5
71 D4	0.8	2.22	0.80	5.86	1325	14	5
80 A4	0.7	1.96	0.80	5.13	1330	18	10
80 B4	0.98	2.55	0.79	6.97	1335	18	10
80 C4	1.20	3.04	0.78	8.37	1365	18	10
80 D4	1.30	3.50	0.73	9.09	1365	18	10
90 SA4	1.45	3.33	0.84	10.22	1355	38	20
90 LA4	1.95	4.43	0.86	13.90	1340	38	20
90 LB4	2.30	5.27	0.83	16.15	1360	38	20
90 LC4	2.70	6.34	0.82	19.10	1350	38	20
100 LA4	2.90	6.29	0.86	20.21	1370	50	40
100 LB4	3.90	8.30	0.86	26.99	1380	50	40
112 MB4	4.80	9.96	0.86	32.86	1395	80	60
112 MC4	6.60	13.68	0.85	45.02	1400	80	60
132 SB4	7.10	14.54	0.85	48.09	1410	150	100
132 MA4	9.80	19.60	0.86	66.61	1405	150	100
132 MB4	12.0	23.73	0.87	81.27	1410	150	100
132 MC4	14.0	28.34	0.84	94.15	1420	150	100
160 MA4	12.0	24.29	0.84	79.30	1445	190	150
160 MB4	14.0	27.68	0.85	93.2	1435	190	150
160 LA4	19.5	38.11	0.85	129.8	1435	190	150
180 LA4	24.0	46.89	0.86	158.6	1445	300	250
180 LB4	28.6	55.89	0.85	189.0	1445	300	250
200 LB4	39.0	74.47	0.86	259.5	1435	300	250
225 S4	48.1	88.82	0.86	313.5	1465	600	400
225 M4	58.5	108.0	0.87	381.3	1465	600	400
250 M4	70.4	122.9	0.89	455.8	1475	700	-
280 S4	97.5	176.2	0.86	628.3	1482	1000	-
280 M4	117.0	216.0	0.86	754.9	1480	1000	-

1. Motor characteristic values reported in the tables refer to intermittent duty (S3 60%), voltage 3~400V 50 Hz, ambient temperature max. 40 °C, altitude up to 1000 m. above sea level operating condition. These motors are not included in the scope of the regulation (EU) 2019/1781 e then and they are exempt from efficiency requirements of the regulation.

2. MGM keeps the data provided as up-to-date and correct as possible. Since the products are subject to changes and improvements, the data indicated cannot be considered binding. The data indicated must also be understood as being general in nature. For specific applications, please contact the MGM staff.

3. For BA Enhanced Power (EP) motors the maximum brake torque values indicated on the chart refer to AC brake, DC brake on BA series is available on request only.

4. The maximum brake torque for BAK 132 motors series is 120 Nm.

BA - BM Enhanced Power (EP) series- Intermittent duty S3 60%

Motor type	Power (kW) S3 60%	In(A) 400V 50Hz	cos φ	Tn (Nm)	rpm	BA Max Brake torque (Nm)	BM Brake torque (Nm)
6 pole							
63 D6	0.14	0.70	0.69	1.79	770	-	5
71 A6	0.22	0.75	0.81	2.53	830	14	5
71 B6	0.30	0.98	0.82	3.45	830	14	5
80 A6	0.45	1.45	0.74	4.82	895	18	10
80 B6	0.70	2.15	0.77	7.60	880	18	10
90 SA6	0.90	2.61	0.79	10.11	850	38	20
90 LA6	1.35	3.68	0.78	14.99	860	38	20
90 LB6	1.60	4.40	0.75	17.46	875	38	20
100 LA6	1.85	4.40	0.80	18.79	940	50	40
100 LB6	2.30	5.75	0.76	23.87	920	50	40
112 MB6	2.70	6.18	0.82	27.72	930	80	60
132 SB6	3.90	8.39	0.79	39.20	950	150	100
132 MA6	5.20	11.32	0.80	52.55	945	150	100
132 MB6	7.20	15.48	0.81	73.15	940	150	100
160 MB6	9.80	20.81	0.82	98.51	950	190	150
160 LA6	12.00	23.92	0.84	120.0	955	190	150
160 LB6	14.30	29.67	0.81	143.0	955	190	150
180 LB6	19.50	38.11	0.85	195.0	955	300	250
200 LA6	24.00	47.46	0.84	240.0	955	300	250
200 LB6	28.60	56.55	0.84	286.0	955	300	250
225 M6	39.30	71.31	0.88	386.9	970	600	400
250 M6	46.30	92.21	0.80	453.9	974	700	-
280 S6	56.30	109.0	0.82	548.6	980	1000	-
280 M6	68.80	133.2	0.82	670.4	980	1000	-

BA - BM Enhanced Power (EP) series- Intermittent duty S3 60%

Motor type	Power (kW) S3 60%	In(A) 400V 50Hz	cos φ	Tn (Nm)	rpm	BA Max Brake torque (Nm)	BM Brake torque (Nm)
8 pole							
71 B8	0.13	0.98	0.60	2.00	640	14	2
80 A8	0.22	1.12	0.68	3.22	640	18	10
80 B8	0.30	1.43	0.72	4.90	585	18	10
90 SA8	0.44	1.71	0.71	6.78	625	38	20
90 LA8	0.70	2.64	0.65	10.28	650	38	20
90 LB8	0.80	3.07	0.65	11.75	650	38	20
100 LA8	0.90	3.71	0.65	13.12	655	50	40
100 LB8	1.35	5.16	0.62	18.82	685	50	40
112 MB8	1.80	5.54	0.68	24.38	705	80	60
132 SB8	2.70	6.34	0.81	38.48	670	150	100
132 MB8	3.60	8.45	0.81	51.31	670	150	100
160 MA8	4.80	11.12	0.77	63.66	720	190	150
160 MB8	6.60	15.69	0.76	87.54	720	190	150
160 LA8	9.00	21.39	0.76	119.4	720	190	150
180 LB8	13.2	30.58	0.77	175.1	720	300	250
200 LA8	18.0	40.14	0.80	238.7	720	300	250
225 M8	26.4	60.48	0.76	350.2	720	600	400
250 M8	36.0	78.56	0.77	467.7	735	700	-
280 S8	44.4	94.55	0.78	576.9	735	1000	-
280 M8	54.0	112.2	0.79	701.6	735	1000	-

The motors of the BA - BM 'Enhanced Power' series, as an alternative to the 60% S3 intermittent duty, can work (and consequently be stated on te nameplate) for short-term duty S2 as indicated in the table below.

Frame size	Duty
56 - 63	S2 30 min
71 - 80	S2 40 min
90	S2 50 min
100 - 112	S2 60 min
132	S2 70 min
160 - 180 - 200	S2 90 min
225	S2 120 min
250 - 280	S2 150 min

1. Motor characteristic values reported in the tables refer to intermittent duty (S3 60%), voltage 3~400V 50 Hz, ambient temperature max. 40 °C, altitude up to 1000 m. above sea level operating condition. These motors are not included in the scope of the regulation (EU) 2019/1781 e then and they are exempt from efficiency requirements of the regulation.

2. MGM keeps the data provided as up-to-date and correct as possible. Since the products are subject to changes and improvements, the data indicated cannot be considered binding. The data indicated must also be understood as being general in nature. For specific applications, please contact the MGM staff.

3. For BA Enhanced Power (EP) motors the maximum brake torque values indicated on the chart refer to AC brake, DC brake on BA series is available on request only.

4. The maximum brake torque for BAK 132 motors series is 120 Nm.

traverse motors with progressive start and stop

A few problems such as the swinging of suspended loads, slipping of trolley wheel on rails, the breakage of some delicate mechanisms can occur on traverse applications. All these problems can be solved using progressive start/stop systems such as clutches, hydraulic couplings, slip-ring motors or soft start devices. Experience has shown that progressive start/stop PV brake motor is a valid alternative to all the other adducted systems. Traverse motors are provided with a flywheel whose dimension and weight are calculated in order to have an adequate moment of inertia. The ratio of rated torque to starting (locked rotor) torque is calculated in order to achieve the best progressive performance.
The flywheel accumulates energy during the start and gives it back during the stop resulting in a progressive change of the rotating speed. PV series motors don't need adjustments with load change or any special maintenance and the progressive action is directly proportional to the load increase. During the planning stage it is necessary to choose carefully the proper motor power as an insufficient power could cause overheating while a too powerful motor could reduce the effect of the flywheel progression.
The flywheel doesn't cause any problems in case of start/stop in rapid succession (positioning of loads) but not for a long period of time in order to avoid overheating. The presence of a special rotor P allows to obtain reduced starting current (I_s). BAPV series motors provide a reduced brake torque, resulting in a really progressive action. The brake torque of BAPV motors is about the half of the corresponding BA standard brake motors while BM and BMPV series motors have the same brake torque.
The progressive start/stop of a BAPV motor is obtained by a flywheel strongly secured to the motors shaft in the place of the normal brake disc of the BA series while in a BMPV motor this progression is obtained by means of a cast iron cooling fan which replaces the thermoplastic one.

PV series motors are available with the following features or option:
- separate brake supply
- manual brake release
- suitable for mounting in any position (vertical, horizontal, etc.)
- two speeds

The table below shows the moment of inertia increase (Kgm^2) for BAPV and BMPV series.

Motor Type	63	71	80	90	100	112	132	160
BAPV	-	$2.97 \cdot 10^{-3}$	$6.78 \cdot 10^{-3}$	$1.11 \cdot 10^{-2}$	$1.82 \cdot 10^{-2}$	$2.89 \cdot 10^{-2}$	$5.8 \cdot 10^{-2}$	$14.3 \cdot 10^{-2}$
BMPV	$3.1 \cdot 10^{-4}$	$1.93 \cdot 10^{-3}$	$3.12 \cdot 10^{-3}$	$9.97 \cdot 10^{-3}$	$1.52 \cdot 10^{-2}$	$1.52 \cdot 10^{-2}$	-	-

The total moment of inertia of a chosen motor is the moment of inertia of a standard brake motor (see motors technical data) plus the flywheel moment of inertia (shown in table above).

Example: moment of inertia of BAPV 71 B4 = moment of inertia of BA 71 B4 + flywheel type BAPV 71 B4 moment of inertia = $8.1 \cdot 10^{-4} + 2.97 \cdot 10^{-3} = 3.78 \cdot 10^{-3}$ Kgm^2

The table below shows the maximum brake torque (Nm) for BMPV with DC brake and BAPV motors with AC brake or DC brake:

Motor type	63	71	80	90	100	112	132	160
BMPV	5	5	10	20	40	60	-	-
BAPV - A.C.	-	7	9	19	25	40	75	95
BAPV - D.C.	-	4.5	7.5	15	21	30	60	77

BAPV series

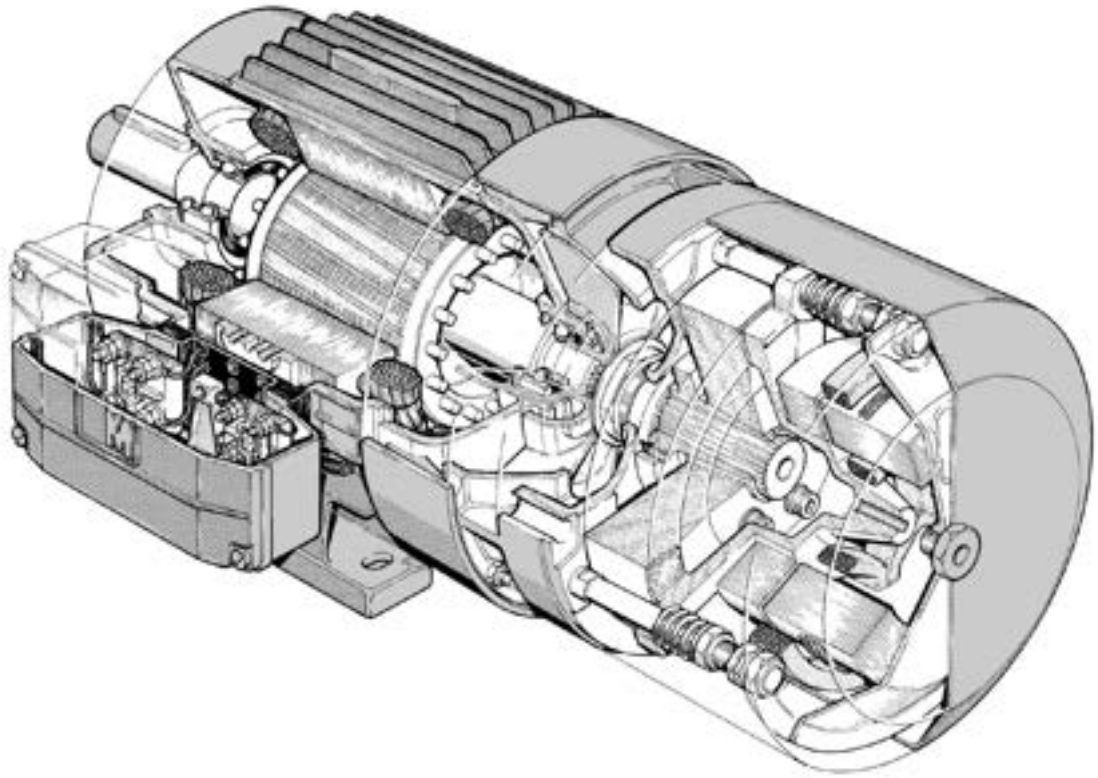

BMPV series

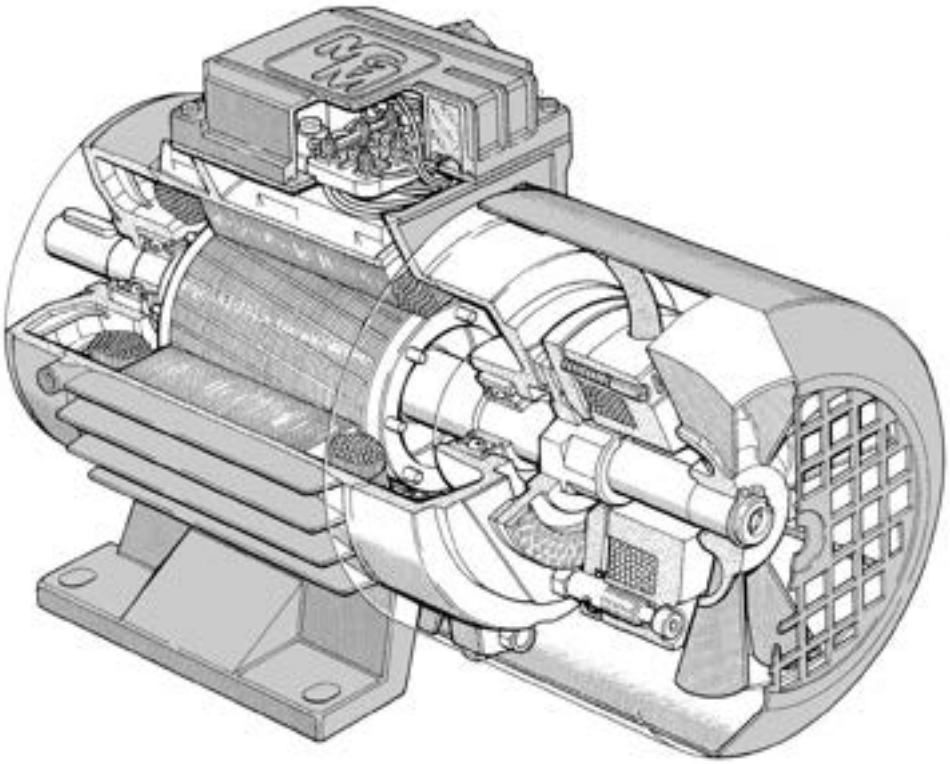

BAH-BAHX 80-315 series

BAH Series 80÷315

BA brake motors are supplied as standard as BAH series starting from the frame size 225 up to 315 mm and on request starting from the frame size 80 up to 200. In the technical data tables the BAH series motors are proposed in the BAHX version for continuous duty with efficiency class IE2 / IE3 (compliant with EU regulation 2019/1781), alternatively they can be supplied in the BAH 'Enhanced Power' version only for intermittent service (S3 60%).

The BAH serie-motors have the same characteristics of the BA-BAX serie-motors. The difference essentially consists in the casing of the brake assembly designed to give greater strenght and protection against the entry of dust and liquids (IP degree). The BAH serie-motors are supplied as standard with IP55 protection degree and, on request, with IP56-65-66 protection degree.

17 - Brake Friction surface
18 - Spring
19 - Brake Adjuster
20 - Brake Torque Adjuster Locknut
21 - Air Gap Adjusting Nut
22 - Brake Coil Locknut
23 - Brake disc
24 - Brake Moving Element
25 - Brake coil
26 - Brake Cover (BAH)
60 - Air Gap
117 - Brake Cover Fixing Screw (BAH 80÷112)
119 - Brake Cover Closing Cap BAH
125 - Brake Cover Fixing Nut (BAH 132÷315)

Starting from frame size 160 casing, shields, flanges, brake friction surface and the brake protective cover are made of cast iron in order to provide a greater mechanical strenght and to be suitable for harsh environment (i.e. marine application). Upon request, starting from frame size 225, the motor body can be made of ductile cast iron.

Starting from frame size 160 shafts are made of 39NiCrMo3 steel.

The standard brake release is the locking type (on request it's possible to have the unlocking one).

The locking type brake release is realized by means of 1 central screw for sizes 80÷112, 2 side screws for sizes 132÷315.

The following options are available upon request:
- special shaft dimensions (DE-side) or double extended shaft (NDE-side);
- encoder;
- brake release system (unlocking type);
- anti-condensation heaters on the motors and/or on brake coils;
- thermistors (PTC) or Bi-Metallic (PTO) thermal protectors;
- non-ventilated execution (BAHS).

Brake assembly BAH 80÷112

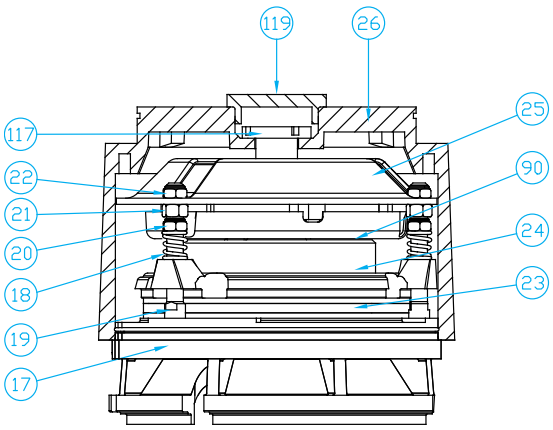

Brake assembly BAH 132÷315

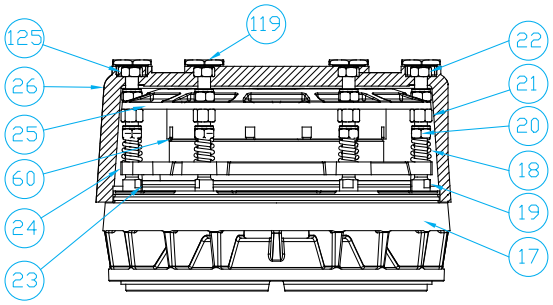

Brake release system for BAH 132÷315

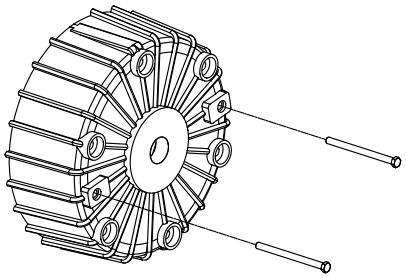

BAH Series

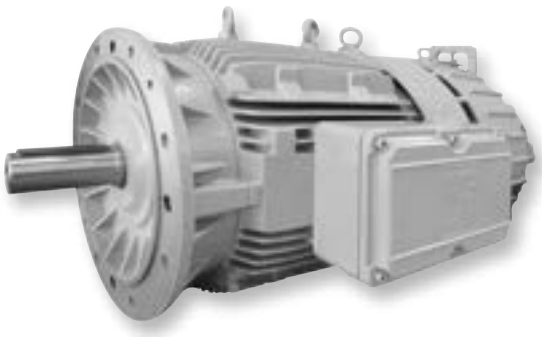

BAHS Series

BAH-BAHX series

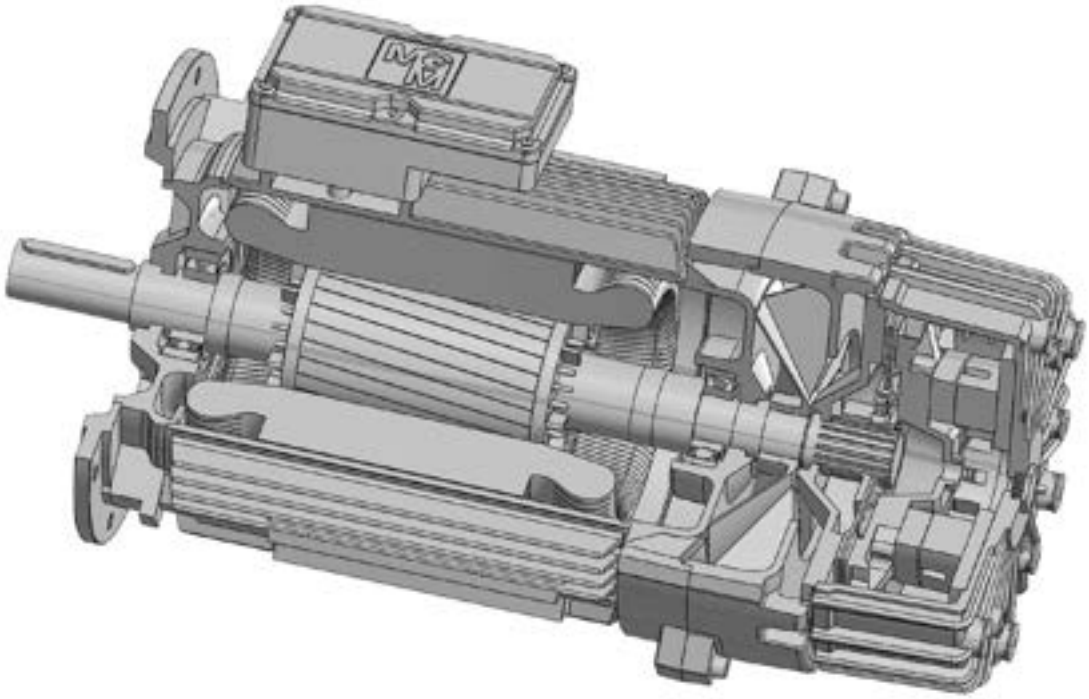

BAHS series

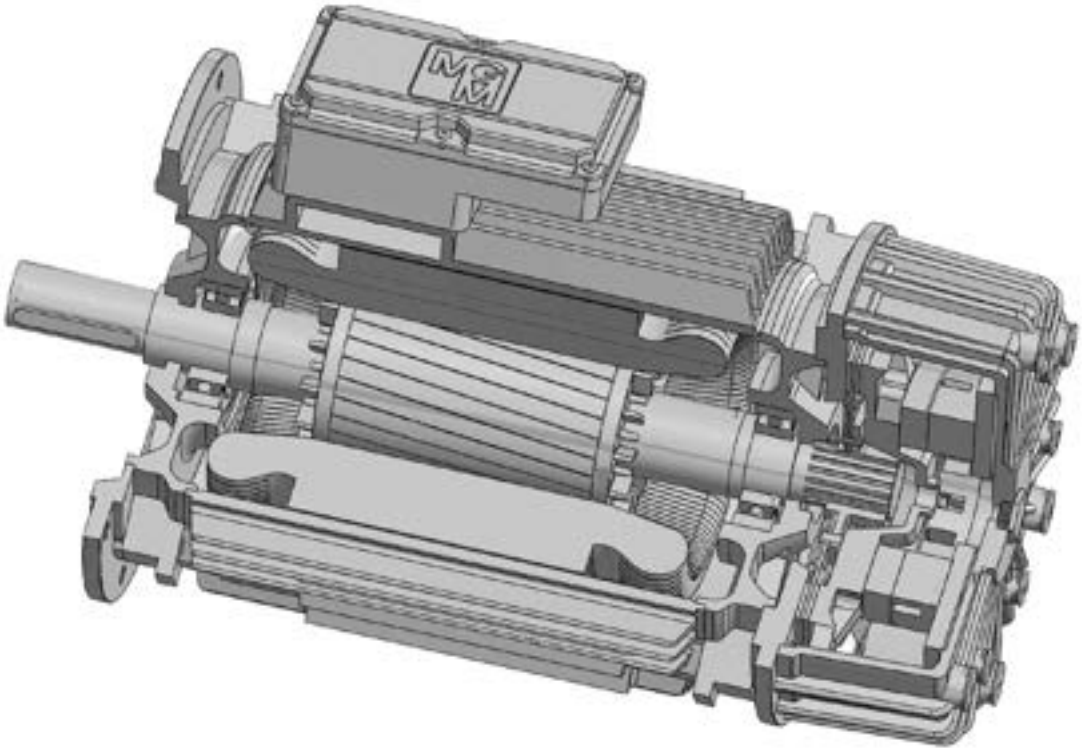

series BAHX technical data – continuous duty (S1)

IE2/IE3 - Reg. (EU) 2019/1781 - 50Hz

Motor type	P_N (kW)	RPM 50Hz	In (A) 400 V 50Hz	cos φ	Tn (Nm)	Ts / Tn	Is / In	IE	Efficiency 50Hz			Moment of inertia Jx 10^{-4} Kgm^2	Max AC brake torque (Nm)	Weight (Kg)
									100%	75%	50%			
2 pole - 3000 RPM														
BAHX 80A2	0.75	2849	1.74	0.77	2.52	3.6	5.7	IE3	80.7	80.2	76.6	11.6	18	15
BAHX 80 B2	1.1	2865	2.50	0.77	3.66	3.3	5.4	IE3	82.7	83.0	80.9	13.0	18	15.5
BAHX 90 SA2	1.5	2890	3.15	0.81	4.95	3.8	8.2	IE3	84.2	85.1	82.8	21.8	38	22
BAHX 90 LA2	2.2	2887	4.95	0.75	7.27	4.4	8.4	IE3	85.9	85.7	84.0	25.1	38	25
BAHX 100 LB2	3.0	2905	6.60	0.76	9.86	4.4	8.8	IE3	87.1	86.3	84.2	45.8	50	36
BAHX 112 MC2	4.0	2935	7.80	0.84	13.00	4.6	10.5	IE3	88.1	88.5	87.0	85.0	80	48
BAHX 132SA2	5.5	2935	10.1	0.88	17.89	4.3	9.5	IE3	89.2	89.6	87.4	231	150	71
BAHX 132 SB2	7.5	2930	13.4	0.89	24.44	4.0	9.0	IE3	90.1	91.0	90.0	270	150	81
BAHX 160 MA2	11	2956	20.5	0.85	35.53	4.5	10.2	IE3	91.2	91.9	90.0	575	190	165
BAHX 160 MB2	15	2956	27.5	0.86	48.45	4.6	10.3	IE3	91.9	92.0	90.7	575	190	165
BAHX 160 LA2	18.5	2956	33.8	0.86	59.76	4.6	10.3	IE3	92.4	92.6	91.6	675	190	180
BAHX 180 LA2	22	2958	36.8	0.93	71.10	4.2	10.8	IE3	92.7	92.0	91.0	1100	300	250
BAHX 200 LA2	30	2955	51.7	0.90	97.00	4.7	9.8	IE3	93.3	93.5	92.3	1650	300	300
BAHX 200 LB2	37	2955	62.7	0.91	119.60	4.7	9.8	IE3	93.7	94.0	92.1	1650	300	300
4 pole - 1500 RPM														
BAHX 80 A4	0.55	1410	1.41	0.72	3.70	2.4	4.3	IE2	77.1	76.4	73.5	17.2	18	15
BAHX 80 S4	0.72	1400	1.90	0.70	4.98	2.9	5.3	IE2	79.6	79.5	78.0	17.2	18	15
BAHX 80 B4	0.75	1415	1.97	0.67	5.06	3.1	5.6	IE3	82.5	82.8	81.2	19.4	18	17
BAHX 90 SA4	1.1	1428	2.6	0.73	7.37	3.4	5.7	IE3	84.1	84.3	82.6	30.5	38	21
BAHX 90 LA4	1.5	1430	3.5	0.74	10.01	3.5	6.2	IE3	85.3	85.2	83.6	34.6	38	24
BAHX 100 S4 (*)(**)	1.85	1432	4.0	0.78	12.33	2.8	6.9	IE3	86.1	86.5	85.4	51.1	50	32
BAHX 100 LA4	2.2	1440	4.8	0.76	14.5	2.9	7.0	IE3	86.7	87.0	85.4	60.1	50	36
BAHX 112 MB4	3	1455	6.4	0.77	19.68	4.0	8.6	IE3	87.7	88.7	87.2	126	80	45
BAHX 112 MC4	4	1445	8.4	0.77	26.40	3.7	7.1	IE3	88.6	88.8	87.6	145	80	50
BAHX 132 SB4	5.5	1457	11.0	0.80	36.04	3.5	7.6	IE3	89.6	91.1	89.3	352	150	86
BAHX 132 MA4	7.5	1457	14.9	0.82	49.15	3.3	7.9	IE3	90.4	90.7	90.2	398	150	95
BAHX 160 MB4	11	1460	22.3	0.78	71.50	3.8	9.1	IE3	91.4	91.6	91.0	737	190	160
BAHX 160 LA4	15	1470	30.2	0.78	97.44	3.5	9.1	IE3	92.1	92.3	91.8	900	190	175
BAHX 180 LA4	18.5	1475	37.1	0.78	119.77	3.5	9.1	IE3	92.6	92.6	91.7	1900	300	250
BAHX 180 LB4	22	1472	41.7	0.82	142.40	4.3	8.6	IE3	93.0	93.0	92.0	1900	300	250
BAHX 200 LB4	30	1475	53.2	0.87	194.22	2.9	8.4	IE3	93.6	93.4	93.4	3000	300	300
BAHX 225 S4	37	1480	66.2	0.86	238.73	2.7	8.5	IE3	93.9	94.4	91.9	4900	600	450
BAHX 225 M4	45	1480	79.3	0.87	290.35	2.8	8.8	IE3	94.2	94.7	92.2	5390	600	465
BAHX 250 M4	55	1480	96.6	0.87	354.88	3.2	9.8	IE3	94.6	95.1	92.6	8000	700	665
BAHX 280 S4	75	1488	136.4	0.83	481.32	3.6	10.2	IE3	95.0	95.5	95.0	11500	1000	770
BAHX 280 M4	90	1488	160.7	0.84	577.59	2.6	9.6	IE3	95.2	95.5	93.2	13100	1000	810
BAHX 315 S4	110	1489	193.5	0.86	705.47	2.6	9.2	IE3	95.4	95.9	93.4	27000	1000	1200
BAHX 315 M4	132	1489	231.7	0.86	846.57	2.7	9.2	IE3	95.6	96.1	93.6	31000	1000	1400

IE2/IE3 - Reg. (EU) 2019/1781 - 50Hz

Motor type	P_N (kW)	RPM 50Hz	In (A) 400 V 50Hz	cos φ	Tn (Nm)	Ts / Tn	Is / In	IE	Efficiency 50Hz			Moment of inertia Jx 10^{-4} Kgm²	Max AC brake torque (Nm)	Weight (Kg)
									100%	75%	50%			
6 pole - 1000 RPM														
BAHX 80 A6	0.37	940	1.31	0.57	3.80	2.7	3.5	IE2	67.6	67.5	60.8	23.4	18	14.5
BAHX 80 B6	0.55	920	1.72	0.63	5.70	2.8	3.5	IE2	73.1	72.8	69.2	27.2	18	15.5
BAHX 90 SA6 **	0.75	935	2.10	0.66	7.66	2.5	5.5	IE3	78.9	79.3	77.1	46.0	38	21
BAHX 90 LA6 **	1.1	935	3.30	0.61	11.23	3.1	4.6	IE3	81.0	81.4	79.2	53.0	38	24
BAHX 100 LA6 **	1.5	955	4.00	0.66	15.20	3.0	5.3	IE3	82.5	82.1	79.1	100	50	35
BAHX 112 MC6 **	2.2	960	5.00	0.75	21.88	2.4	6.4	IE3	84.3	84.4	82.5	200	80	50
BAHX 132 SB6 **	3	965	6.80	0.75	29.68	3.1	8.1	IE3	85.6	85.8	83.8	346	150	78
BAHX 132 MA6 **	4	965	9.20	0.72	39.58	3.1	6.7	IE3	86.8	88.2	87.1	401	150	83
BAHX 132 MB6 **	5.5	965	12.50	0.72	54.42	3.0	6.6	IE3	88.0	88.2	86.6	508	150	94
BAHX 160 MB6	7.5	965	15.80	0.76	74.21	3.0	7.2	IE3	89.1	89.3	882	1100	190	160
BAHX 160 LB6	11	965	22.90	0.77	108.85	2.7	9.1	IE3	90.3	90.5	88.5	1350	190	185
BAHX 180 LB6	15	978	31.30	0.76	147.70	3.1	9.1	IE3	91.2	91.2	90.0	2400	300	270
BAHX 200 LA6	18.5	980	37.40	0.80	180.27	3.7	8.6	IE3	91.7	91.8	89.9	3500	300	300
BAHX 200 LB6	22	975	43.10	0.80	215.47	3.1	7.3	IE3	92.2	92.3	90.4	3500	300	300
BAHX 225 M6	30	985	57.90	0.80	291.40	3.7	7.7	IE3	92.9	93.2	92.9	7800	600	445
BAHX 250 M6	37	980	68.20	0.84	360.50	3.2	7.9	IE3	93.3	93.4	91.5	10090	700	675
BAHX 280 S6	45	987	88.80	0.78	436.30	2.8	6.0	IE3	93.7	93.8	91.9	17000	1000	750
BAHX 280 M6	55	987	108.1	0.78	533.20	2.8	6.6	IE3	94.1	94.2	92.3	20000	1000	790
BAHX 315 S6	75	988	141.3	0.81	724.91	2.6	7.0	IE3	94.6	94.7	92.8	34000	1000	1200
BAHX 315 M6	90	988	169.0	0.81	869.90	2.6	7.0	IE3	94.9	95.0	93.1	52000	1000	1400
8 pole - 750 RPM														
BAHX 80 A8	0.18	690	0.86	0.60	2.49	2.2	2.4	IE2	45.9	46.3	44.1	23.2	18	14.5
BAHX 80 B8	0.25	675	1.10	0.61	3.53	2.2	2.4	IE2	50.6	51.0	48.8	27.2	18	15.5
BAHX 90 SA8	0.37	690	1.52	0.59	5.12	2.3	3.2	IE2	56.1	56.5	54.3	35.9	38	20
BAHX 90 LA8	0.55	690	2.30	0.56	7.61	2.3	3.1	IE2	61.7	62.1	59.9	46.1	38	22.5
BAHX 100 LA8	0.75	700	2.60	0.56	10.23	2.3	3.3	IE3	75.0	75.2	73.2	87.4	50	33
BAHX 100 LB8	1.1	700	3.80	0.54	15.00	2.4	4.4	IE3	77.7	77.9	75.9	99.2	50	35
BAHX 112 MB8	1.5	720	4.80	0.57	19.89	2.2	5.0	IE3	79.7	79.9	77.9	168	80	45
BAHX 132 SB8	2.2	710	5.55	0.70	29.59	2.3	5.2	IE3	81.9	82.1	80.1	325	150	73
BAHX 132 MB8	3	710	7.40	0.70	40.35	2.3	5.2	IE3	83.5	83.7	81.7	413	150	80
BAHX 160 MA8	4	725	9.60	0.71	52.68	2.5	6.7	IE3	84.8	84.9	83.0	1030	190	156
BAHX 160 MB8	5.5	725	13.40	0.69	72.44	2.5	6.7	IE3	86.2	86.3	84.4	1030	190	156
BAHX 160 LA8	7.5	725	18.30	0.68	98.78	2.5	6.7	IE3	87.3	87.4	85.5	1360	190	174
BAHX 180 LB8	11	730	26.10	0.69	143.89	2.4	5.7	IE3	88.6	88.7	86.8	2460	300	243
BAHX 200 LA8	15	735	34.70	0.70	194.88	2.1	6.5	IE3	89.6	89.7	87.8	4700	300	300
BAHX 225 S8	18.5	740	44.00	0.67	238.73	2.4	7.5	IE3	90.1	90.1	88.3	7470	600	480
BAHX 225 M8	22	735	49.40	0.70	285.83	2.1	7.0	IE3	90.6	90.6	89.0	7470	600	480
BAHX 250 M8	30	740	64.17	0.74	387.14	2.1	6.8	IE3	91.3	91.3	89.5	10500	700	675
BAHX 280 S8	37	745	75.64	0.77	474.27	2.2	7.0	IE3	91.8	91.8	90.0	20500	1000	750
BAHX 280 M8	45	745	90.42	0.78	576.82	2.2	7.2	IE3	92.2	92.2	90.4	23500	1000	790

1. Motor characteristic values reported in the tables refer to continuous duty (S1), voltage 3~400V 50 Hz, ambient temperature max. 40 °C, altitude up to 1000 m above sea level operating condition.
2. The motor marked with * can be supplied with reduced shaft and flange with the dimensions related to the frame size 90.
3. . The motors nameplates have the data relating to operation at both 50 Hz and 60 Hz with the same power value except for the motors marked with **.
4. BAX motor series have the same brake components as the BA with the same frame size, therefore the braking performance are the same. The maximum brake torque values indicated on the chart refer to AC brake, DC brake on BABAX series is available on request only.
5. The maximum brake torque for BAHXK 132 motors series is 120 Nm.
6. MGM keeps the data provided as up-to-date and correct as possible. Since the products are subject to changes and improvements, the data indicated cannot be considered binding. The data indicated must also be understood as being general in nature. For specific applications, please contact the MGM staff.

BAHX 80-315 series dimensions

Size	80	90S****	90L	100L***	112M***	132S	132M	160M	160L	180L	200L**	225S	225M	250M	280S	280M	315S	315M
A	125	140	140	160	190	216	216	254	254	279	318	356	356	406	457	457	508	508
B	100	100	125	140	140	140	178	210	254	279	305	286	311	349	368	419	406	457
C	50	56	56	63	70	89	89	108	108	121	133	149	149	168	190	190	216	216
D	19	24	24	28	28	38	38	42	42	48	55	60	60	65	75	75	80	80
d	M6	M8	M8	M10	M10	M12	M12	M16	M16	M16	M20	M20	M20	M20	M20	M20	M20	M20
E	40	50	50	60	60	80	80	110	110	110	110	140	140	140	140	140	170	170
Fa	12	12	12	14.5	14.5	14.5	14.5	18.5	18.5	18.5	18.5	18,5	18.5	18.5	18.5	18.5	24	24
Fb	M6	M8	M8	M8	M8	M10	M10											
f	6	8	8	8	8	10	10	12	12	14	16	18	18	18	20	20	22	22
g	15.5	20	20	24	24	33	33	37	37	42.5	49	53	53	58	67.5	67.5	71	71
H	80	90	90	100	112	132	132	160	160	180	200	225	225	250	280	280	315	315
h	6	7	7	7	7	8	8	8	8	9	10	11	11	11	12	12	14	14
I	10	10	10	12	12	12	12	14.5	14.5	14.5	18.5	18	18.5	24	24	24	28	28
K	14	14	14	16	16	22	22	24	24	24	30	33	33	33	24	24	45	45
L	162	171	196	217	229													
L1	198	207	232	254	262	294	339	373	395	420	511	530	530	569	708	759	753	804
Ma	165	165	165	215	215	265	265	300	300	300	350	400	400	500	500	500	600	600
Mb	100	115	115	130	130	165	165											
Na	130	130	130	180	180	230	230	250	250	250	300	350	350	450	450	450	550	550
Nb	80	95	95	110	110	130	130											
Oa	3.5	3.5	3.5	4	4	4	4	5	5	5	5	5	5	5	5	5	6	6
Ob	3	3	3	3.5	3.5	3.5	3.5											
Pa	200	200	200	250	250	300	300	350	350	350	400	450	450	550	550	550	660	660
Pb	120	140	140	160	160	200	200											
Q	395	429	454	505	522	624	662	766	810	887	935	1032	1031	1141	1232	1283	1379	1430
$Q_{BAF/BAPV}$																		
R	80	98.5	98.5	98.5	98.5													
R1	135	170	170	170	170	199	199	268	268	268	327	327	327	327	506	506	506	506
S	12	12	12	14	14	15	15	15	15	15	15	20	18	20	18	18	24	24
V	9.5	10.5	10.5	12.5	14.5	16	16	22	22	24	24	32	32	35	40	40	45	45
W	113	127	127	138	158	-	-	166	166	196	200		230	263	278	278	330	330
W1	130	151	151	162	176	215	215	249	249	270	304	341	323	352	458	458	498	498
Y	171▪	185▪	185▪	206▪	228▪	291▪	291▪	336▪	336▪	391▪	391	437	437	489	489	489	489	489
Z	75	98.5	98.5	98.5	98.5													
Z1	86	112	112	112	112	151	151	166	166	166	202	202	202	202	282	282	282	282

▪ For all foot mounted motors (B3) please check that the fixing base of the motor feet does not interfere with the overall dimensions (dimension Y) of the brake protection cover.(item 26)
* 225S-225M 2 poles D = 55 E = 110, 250M 2 poles D = 60 E = 140, 280S-280M 2 poles D = 65 E = 140, 315 2 poles D = 65 E = 110
** The table shows the dimensions relating to the motors of the BAHX 200 series, for the BAH 200 motors, on the other hand, consider the following values:
L1 = 446, Q = 917, R1 = 268, w1 = 270, Z1 = 166
*** Frame size 100-112 motors with double box and construction form B3 have the following dimensions: frame size 100 (L1 = 254, R1 = 170, w1 = 162, Z1 = 112),
frame size 112 (L1 = 262, R1 = 170, w1 = 176, Z1 = 112)
**** For 90S motors in long casing version, consider the dimensions of the 90L column.

BAHX 80-315 series dimensions

B3

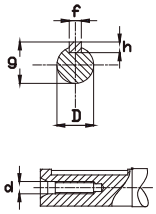

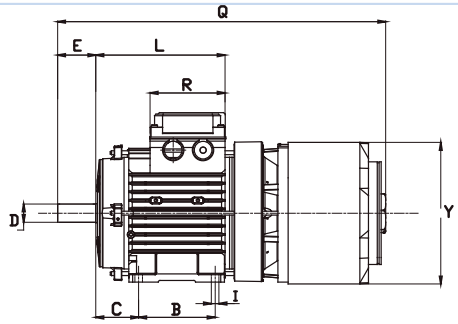

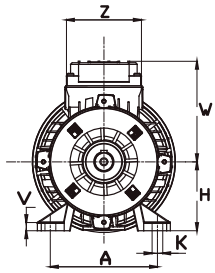

B5

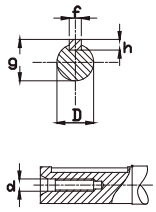

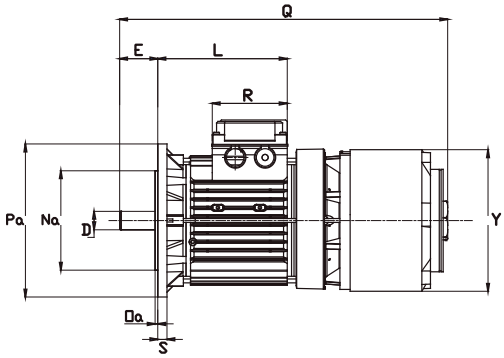

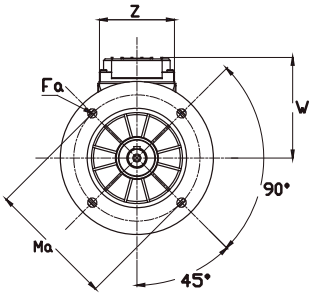

B14

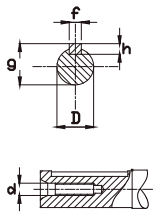

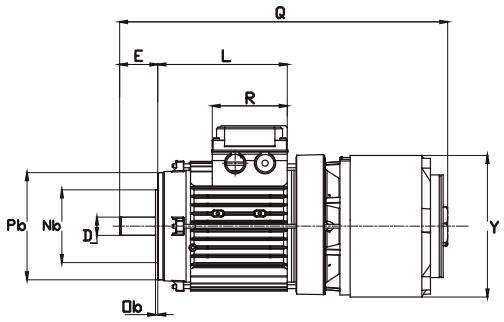

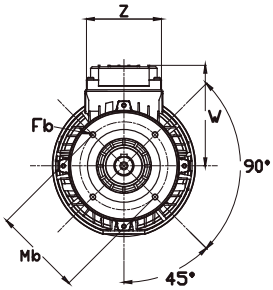

160÷315 B3

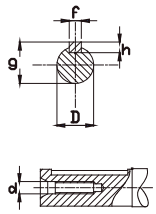

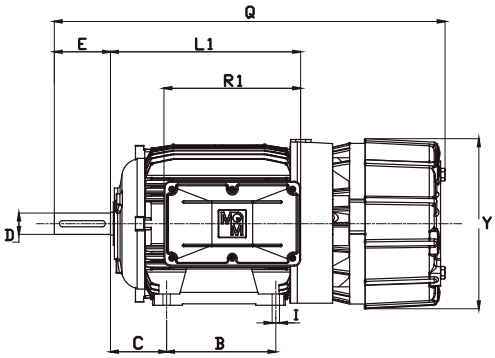

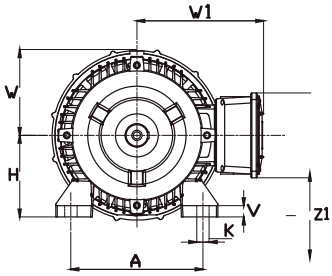

Double terminal board box

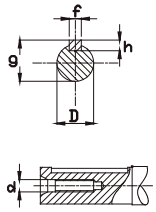

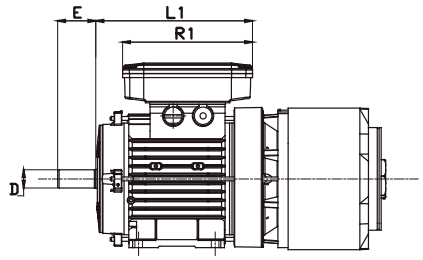

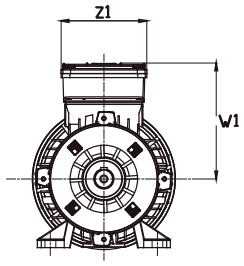

BAPK series

hoist motors

BAPK series brake motors are available starting from 100 up to 225 frame size. Powers and poles are the same as the BA series motors (see BA technical data). BAPK series motors have the same motor construction as BA series motors but present some special parts. Single and most of the two speed BAPK motors are fitted with a special rotor (P rotor) that increases the starting torque (locked rotor) by 20% about and that reduces the starting current (locked rotor) by 10% about.
The brake assembly of a BAPK motors is just the same of the standard BA series with 2 braking surfaces but with a special brake disc (K) with steel hub. The BAPK series motors are equipped as standard with an AC brake.
Shields and flanges are made of cast iron. Frame is made of aluminium from 100 up to 132 frame size (132 cast iron frame is available on request) while it is made of cast iron starting from 160 frame size. Dimensions are the same as the BA series (dimensions sheet pag. 39). To purchase BAPK series motors the writing BAPK has to be clearly stated in the order (i.e. BAPK 112MB4).

K brake disc

The K brake disc is provided as standard on motors starting from 160 frame size while it's available on request on motors from 90 up to 132 frame size. As for the case of the BA standard brake, which is made of a special aluminium/thermoplastic material, the K brake disc has two friction surfaces and it has a nucleus and a steel hub, which guarantee a higher sturdiness and moment of inertia. K brake disc is strongly recommended for hoisting application, safety application or under high environment temperature (50° C or above).
K brake disc has a shorter life than the standard brake disc as a consequence of the increased moment of inertia therefore it's advisable to use the standard brake disc on heavy start/stop duty cycle application where the K disc is not necessary. To purchase motors with K brake disc, the writing BAK has to be clearly stated in the order (i.e. BAK 112 MB4). For further information please contact MGM.

BAF series

premium brake torque motors - BAF series

BAF series motors are brake motors providing a very high brake torque. BAF series motors are particularly suitable for those applications where it's needed to keep the motor locked up also under a very high turning moment. The required high value of static brake torque is achieved by the use of a double brake disc (BAF series). BAF series motors are provided with AC brake. BAF motors are available starting from 100 up to 200 frame size. The table below shows the BAF series brake torque values (50% more than standard BA series).

Motor type	BAF 100	BAF 112	BAF 132	BAF 160	BAF 180	BAF 200
Brake Torque Max (Nm)	75	120	225	285	450	450

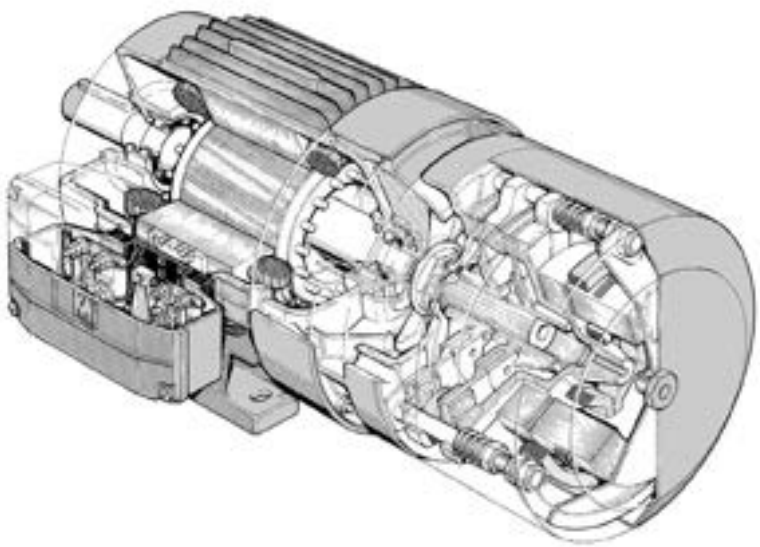

AC electric motors operating in non standard conditions (low frequency inverter duty, long overcharge periods, heavy duty cycles) could need additional cooling servo-fan. BASV series motors with forced cooling are provided with two additional cooling servo-fans fixed on the motor frame.

This cooling system (MGM patent), compared to the traditional solution, has the following features:

1. The standard self cooling fan inside the motor is kept additionally to the cooling servo-fans.
2. The whole heating surface is increased as the fan fixing system is itself a heat dissipation element additional to the existing fins on the frame.
3. Low noise level.
4. No additional motor length compared to the standard one.
5. Manual brake release with manual rotation.
6. Uniform winding cooling along the whole motor length.
7. The brake friction surface is cooled on the motor side.

Where the forced cooling is used to limit the operating temperature in heavy start/stop duty application, it should be noted that the efficiency of the forced cooling increases with the number of poles of the motor. It's hard to estimate the amount of hot air removed by the forced cooling fans but it can be roughly said that it is the same as the air removed by the standard servo-fan of a 4 pole motor operating at 50 Hz.
It is advisable to use thermal protectors in heavy operating conditions. The table below shows the technical details of fans supplied at 1~230V single-phase and 400 three-phase. The servo-fans can be supplied both at 50Hz or 60Hz. On request forced cooling fans can be provided with different voltage supply.

Motor type	Dim X (mm)	Dim Y (mm)	Dim L (mm)	Volt	Watt
BASV 71	210	107	102	1~230	2x16
BASV 80	230	108	120	1~230	2x16
BASV 90	270	129	129	1~230	2x20
BASV 100	280	129	134	1~230	2x20
BASV 112	300	142	142	1~230	2x20
BASV 132	348	169	169	1~230	2x20
BASV 160	431	184	190	1~230	2x36
BASV 180	485	211	211	1~230	2x36
BASV 200	485	211	211	1~230	2x36
BASV 225	522	221	221	1~230	2x36

BASV Series

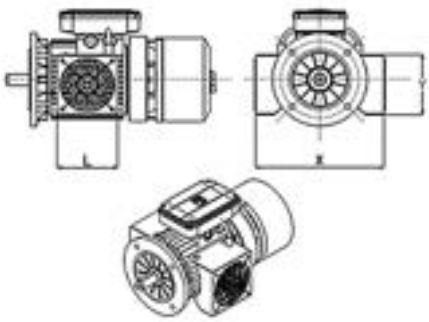

It is also possible to have the motors of the BM series in the BMAV version with axial ventilation (axial servo-fan located in the rear part of the motor, replacing the standard motor fan).

Motor type	Dim Q (mm)	Volt	Watt
BMAV 56	250	1~230	16
BMAV 63	280	1~230	16
BMAV 71	315	1~230	16
BMAV 80	364	1~230	16
BMAV 90	390	1~230	36
BMAV 100	415	1~230	36
BMAV 112	465	1~230	36
BMAV 132	604	3~400	93
BMAV 160	734	3~400	93
BMAV 180	825	3~400	123
BMAV 200	825	3~400	123
BMAV 225	1065	3~400	123

BMAV Series

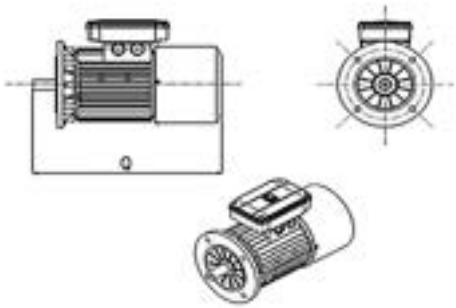

built-in encoder motors

The motor with built-in encoder is supplied as standard with a separate brake power supply from that of the motor. The letter E after the series indicates that the motor is supplied complete with encoder, the letters SV and AV indicate the presence of auxiliary ventilation radial (SV) or axial (AV), the letter H indicates the casing of the brake unit with a higher IP degree of protection. The following series are available:

BAE series: asynchronous three phase fan cooled brake motors with built-in encoder and frame size from 71 up to 315. The encoder is located at the Non-Drive end (NDE side) in a safe place protected by a well closed cover. Forced (radial) ventilation is available on request (BAESV).The motors are also available in the BAH version (BAHE, BAHESV). The brake hand release is not availalble for BAE series while is avalable on request for BAHE-BAHESV series motors.

BAE series

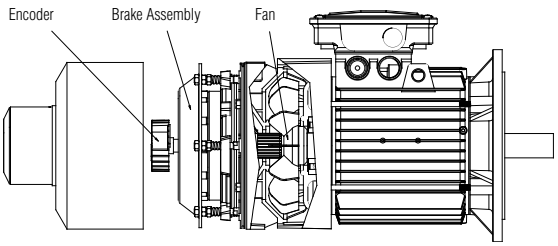

BAESV series

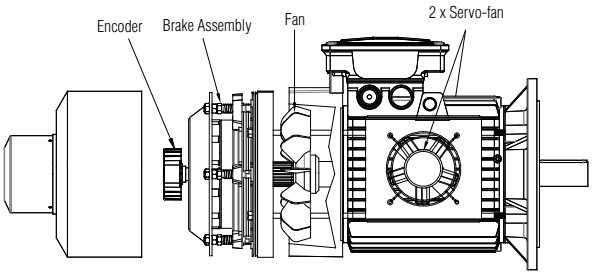

BMEAV series: asynchronous three phase brake motors with DC brake with axial forced ventilation, built-in encoder and frame size from 63 up to 225. The encoder is located at the NDE side between the brake coil and the servo fan. On request it is also available in the self-cooled version (BME) without forced ventilation. The motors are supplied on request with a manual brake release lever.

BMEAV series

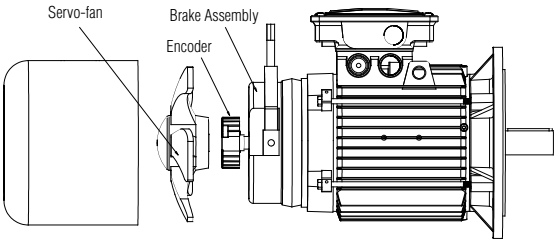

BME series

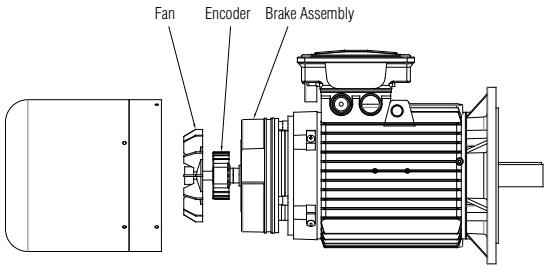

Motors with built in encoder (**BAE, BAESV, BAHE BAHESV, BMEAV, BME series**) are designed to be suitable for inverter use; precise dynamic balancing along with an accurate motor insulation system are adopted in order to withstand the greater electrical and mechanical stress. The mechanical coupling is the same of a standard motors (special shaft and flange are available on request), wirings are very simple to be made: power and electrical signal duty are separated. Upon request, the motors can be supplied with the cCSAus approval.

The motors are available in BAX (BAXE, BAXESV, BAHXE, BAHXESV) and BMX (BMXEAV, BMXE) versions for continuous duty and efficiency class IE2 / IE3 (compliant with European regulation EU 2019/1781).

Encoder

To identify exactly the needed encoder, the following characteristics have to be indicated:
- Encoder type (incremental or absolute)
- Resolution (PPR)
- Zero pulse
- Encoder supply voltage
- Electronic output configuration
- IP protection degree (please consider that for the BAE series the encoder is also protected by a well closed cover)
- Interface type
- Code (only for absolute encoders)
- Single turn or Multi turn (only for absolute encoders)

The output cable is provided as standard without connector (floating cable). On request a connector can be supplied.

Size	71	80	90S	90L	100L	112M	132S	132M	160M	160L	180L	200L	225S	225M
A	112	125	140	140	160	190	216	216	254	254	279	318	356	356
B	90	100	100	125	140	140	140	178	210	254	279	305	286	311
C	45	50	56	56	63	70	89	89	108	108	121	133	149	149
D*	14	19	24	24	28	28	38	38	42	42	48	55	60	60
d	M5	M6	M8	M8	M10	M10	M12	M12	M16	M16	M16	M20	M20	M20
E*	30	40	50	50	60	60	80	80	110	110	110	110	140	140
Fa	9.5	11.5	11.5	11.5	14.5	14.5	14.5	14.5	18.5	18.5	18.5	18.5	18.5	18.5
Fb	M6	M6	M8	M8	M8	M8	M10	M10						
f	5	6	8	8	8	8	10	10	12	12	14	16	18	18
g	11	15.5	20	20	24	24	33	33	37	37	42.5	49	53	53
H	71	80	90	90	100	112	132	132	160	160	180	200	225	225
h	5	6	7	7	7	7	8	8	8	8	9	10	11	11
I	7	10	10	10	12	12	12	12	14.5	14.5	15	18.5	18	18
K	10.5	14	14	14	16	16	22	22	24	24	24	30	18	18
L1	184	194	207	232	254	262	294	339	373	395	420	446	440	440
Ma	130	165	165	165	215	215	265	265	300	300	300	350	400	400
Mb	85	100	115	115	130	130	165	165						
Na	110	130	130	130	180	180	230	230	250	250	250	300	350	350
Nb	70	80	95	95	110	110	130	130						
Oa	3.5	3.5	3.5	3.5	4	4	4	4	5	5	5	5	5	5
Ob	2.5	3	3	3	3.5	3.5	3.5	3.5						
Pa	160	200	200	200	250	250	300	300	350	350	350	400	450	450
Pb	105	120	140	140	160	160	200	200						
Q	415	451	483	507	558	576	677	715	803	847	931	956	1077	1077
q	76	76	76	76	76	76	76	76	76	76	76	76	89	89
R1	135	135	170	170	170	170	199	199	268	268	268	268	327	327
S	10	12	12	12	14	14	15	15	15	15	15	15	20	20
V	8	9.5	10.5	10.5	12.5	13.5	16	16	21	21	24	24	32	32
W									165	165	188	188	224	224
W1	121	130	148	148	162	176	210	210	246	246	266	266	341	341
Y	145	160	180	180	196	218	265	265	324	324	357	357	430	430
Y1	121	121	121	121	121	121	121	121	121	121	121	121	158	158
Z1	86	86	112	112	112	112	151	151	167	167	167	167	202	202

* 225S-225M 2 pole D=55, E=110

** BAE200 motors have the following dimensions: R1 = 268, L1 = 446, Q = 1002, Z1 = 167, w = 188, w1 = 269.5, Y = 355

BAE B3

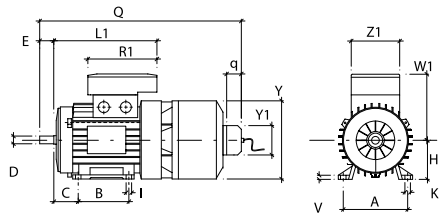

BAE B5

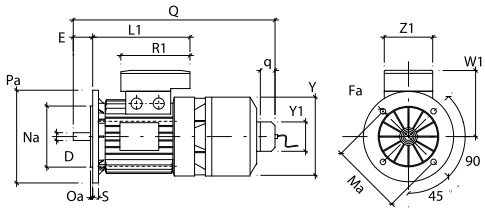

BAE B14

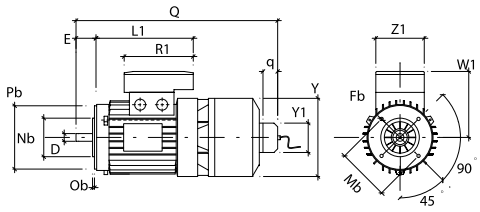

BAE 160/180/200/225 B3

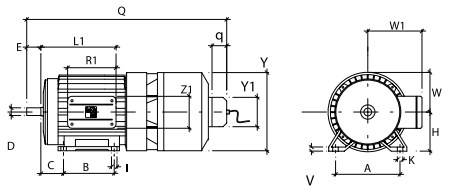

BAE series

Shaft End

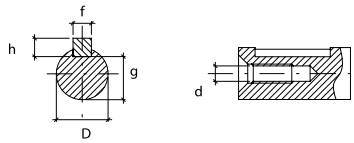

BMEAV series dimensions

Size	63	71	80	90S	90L	100L	112M	132S	132M	160M	160L
A	100	112	125	140	140	160	190	216	216	254	254
B	80	90	100	100	125	140	140	140	178	210	254
C	40	45	50	56	56	63	70	89	89	108	108
D	11	14	19	24	24	28	28	38	38	42	42
d	M4	M5	M6	M8	M8	M10	M10	M12	M12	M16	M16
E	23	30	40	50	50	60	60	80	80	110	110
Fa	9.5	9.5	11.5	11.5	11.5	14.5	14.5	14.5	14.5	18.5	18.5
Fb	M5	M6	M6	M8	M8	M8	M8	M10	M10		
f	4	5	6	8	8	8	8	10	10	12	12
g	8.5	11	15.5	20	20	24	24	33	33	37	37
H	63	71	80	90	90	100	112	132	132	160	160
h	4	5	6	7	7	7	7	8	8	8	8
I	7	7	10	10	10	12	12	12	12	14.5	14.5
K	10.5	10.5	14	14	14	16	16	22	22	24	24
L1	166	184	194	207	232	254	262	294	339	373	395
Ma	115	130	165	165	165	215	215	265	265	300	300
Mb	75	85	100	115	115	130	130	165	165		
Na	95	110	130	130	130	180	180	230	230	250	250
Nb	60	70	80	95	95	110	110	130	130		
Oa	3	3.5	3.5	3.5	3.5	4	4	4	4	5	5
Ob	2.5	2.5	3	3	3	3.5	3.5	3.5	3.5		
Pa	140	160	200	200	200	250	250	300	300	350	350
Pb	90	105	120	140	140	160	160	200	200		
Q	310	346	384	440	465	537	520	670	708	816	860
R1	135	135	135	170	170	170	170	199	199	268	268
S	10	10	12	12	12	14	14	15	15	15	15
V	7	8	9.5	10.5	10.5	12.5	13.5	16	16	21	21
W										155	155
W1	111	121	130	148	148	162	176	210	210	246	246
Y	121	136	153	178	178	198	219,5	255	255	310	310
Z1	86	86	86	112	112	112	112	151	151	167	167

BMEAV B3

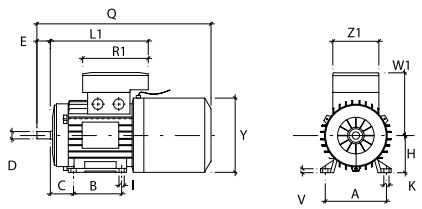

BMEAV B5

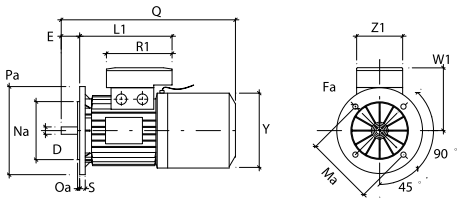

BMEAV B14

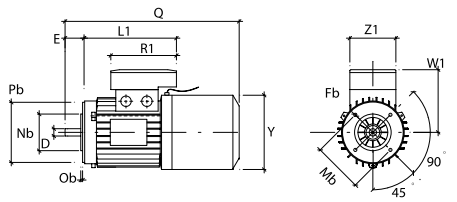

BMEAV 160/180/200/225 B3

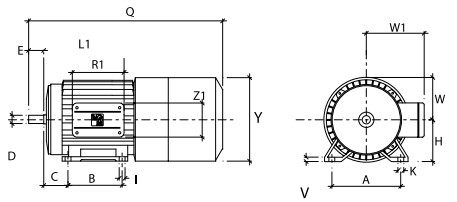

BMEAV series

Shaft End

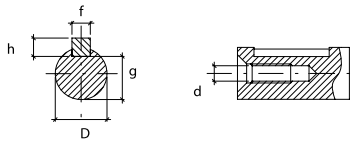

Please contact MGM for further information regarding the dimensions of the motors series BMEAV with 180-200-225 frame size or the dimensions of the motors series BM(X)E.

R series

The "R" Series is made up of a new generation of asynchronous standard motors (SMR) or brake motors (BAR or BMR), 4 and 6 poles and IEC frame sizes from 56 up to 132. Available nominal torques range is from 0.4Nm to 37Nm on 4 pole motors while it's from 3.88Nm to 54.71Nm on 6 pole motors. **R series motor is designed to be controlled by inverter only**. The reference frequency at a voltage of 400V is 120Hz instead of 400V 50Hz. The special technology allows to the R series motors to have the following features:

- constant torque from 3 to 120Hz
- torque close to the nominal one at 0 rpm (only in a closed loop vector system)
- Higher Power Density (same power in smaller motor sizes)
- reduced moment of inertia compared to a motor with same power (high dynamics)
- faster acceleration and deceleration times
- excellent behaviour during transients (4 poles) and in continuous duty (6 poles)
- optimized for use with different types of inverters in the market
- balancing suited for operation with high acceleration
- standard motor sizes and mounting
- low noise
- standard electrical wiring
- encoder option available
- user friendly product (connectors not needed)

On standard, R series motors are equipped with thermal protectors, rotor and stator magnetic steel with advanced magnetic properties, motor winding specifically designed and impregnated for operation at high frequency, higher grade rotor balancing and bearings resistant to high rotation speed. All the options of standard motors series are also available for the R Series
IP54 enclosure rating is factory standard for brake motors while IP55 for standard motors. Enclosure rating up to IP56 is available on request. All motors can be provided either with an encoder or encoder ready.

Low moment of inertia (at equal power)

Thanks to the diameter of the bottom rotor, the reduction in the moment of inertia for a motor in the new series "R" is very significant compared to one with equal power and traditional polarity. This means lower energy demand during transients and definite improvement in the dynamic qualities. The examples below show a comparison in the moment of inertia for two motors:

- standard motor (without brake) 0.75 kW (SM 80 B4)12.39 x 10^{-4} Kgm^2
- "R" series motor (without brake) 0.72 kW (SMR 63 D4) 3.68 x 10^{-4} Kgm^2
- brake motor standard version 2.2 kW (BA 100 LA4) 51.14 x 10^{-4} Kgm^2
- "R" series brake motor 2.16 kW (BAR 80 D4) 18.3 x 10^{-4} Kgm^2

Constant torque

The torque remains constant at the nominal value and from a few Hz up to 120Hz. Once over 120Hz, the motor delivers constant power up to 3600 for 4 poles and 2400 for 6 poles.
The torque value with locked rotor can reach about 100% of the nominal torque. The greater extension of the speed adjustment field in which the motor retains the capacity to provide constant torque, allows a better control of the motor and machine on which it is applied.

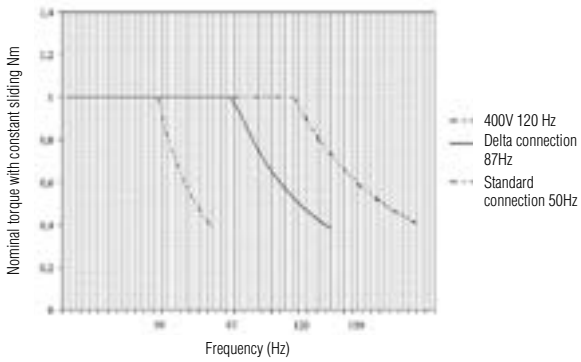

Motor type	Inverter power supply [V]	Nominal torque [Nm]	Nominal current [I]	Synchronous speed [Rpm]	Maximum speed [Rpm]	Nominal power [W]	Moment of inertia [$10^{-4}kgm^2$] SMR	Moment of inertia [$10^{-4}kgm^2$] BMR	Moment of inertia [$10^{-4}kgm^2$] BAR
6 pole									
80 A	400	3.88	3.0	2400	3600	900	18.60	19.0	23.4
80 B	400	5.84	4.3	2400	3600	1320	22.41	22.9	27.2
90 SA	400	7.87	5.5	2400	3600	1800	29.80	31.5	35.9
90 LA	400	11.54	7.7	2400	3600	2640	39.95	41.7	46.1
90 LB	400	13.64	9.4	2400	3600	3120	46.38	48.1	53.0
100 LA	400	15.40	9.4	2400	3600	3600	78.26	80.8	87.4
100 LB	400	19.20	12	2400	3600	4440	88.05	92.5	99.2
112 MB	400	22.23	12.5	2400	3600	5280	145.38	200.6	168.3
132 SB	400	29.84	17.28	2400	3600	7200	292.7	304.9	346.0
132 MA	400	39.79	22.88	2400	3600	9600	348.5	360.7	401.0
132 MB	400	54.71	29.52	2400	3600	13200	455.5	467.7	508.0

R series

Motor type	Inverter power supply [V]	Nominal torque [Nm]	Nominal current [I]	Synchronous speed [Rpm]	Maximum speed [Rpm]	Nominal power [W]	Moment of inertia [10^{-4}kgm^2] SMR	Moment of inertia [10^{-4}kgm^2] BMR	Moment of inertia [10^{-4}kgm^2] BAR
4 pole									
56 A	400	0.41	0.96	3600	4000	144	1.75	1.8	
56 B	400	0.65	0.98	3600	4000	216	1.75	1.8	
56 C	400	0.87	1.32	3600	4000	290	1.75	1.8	
63 A	400	0.86	1.08	3600	4000	290	2.32	2.5	
63 B	400	1.27	1.44	3600	4000	430	2.93	3.1	
63 C	400	1.56	1.80	3600	4000	530	3.4	3.5	
63 D	400	2.12	2.52	3600	4000	720	3.68	3.8	
71 A	400	1.71	1.92	3600	4000	600	5.52	5.7	7.20
71 B	400	2.52	2.64	3600	4000	890	6.42	6.6	8.10
71 C	400	3.86	3.96	3600	4000	1320	7.75	7.9	9.43
71 D	400	4.60	4.80	3600	4000	1560	8.24	8.4	9.92
80 A	400	3.75	4.08	3600	4000	1320	10.17	10.6	14.97
80 B	400	5.12	5.28	3600	4000	1800	12.39	12.8	17.19
80 C	400	6.18	6.24	3600	4000	2160	13.5	13.9	18.30
90 SA	400	7.50	6.48	3600	4000	2640	20.02	21.7	26.15
90 LA	400	10.23	8.64	3600	4000	3600	24.40	26.1	30.53
90 LB	400	12.62	10.32	3600	4000	4440	28.44	30.2	34.57
90 LC	400	15.12	12.96	3600	4000	5280	28.44	30.2	34.57
100 LA	400	14.90	12.00	3600	4000	5280	40	44.5	51.14
100 LB	400	20.32	15.60	3600	4000	7200	48.93	53.4	60.0
112 MB	400	27.00	19.44	3600	4000	9600	124.9	133.5	125.7
112 MC	400	36.99	27.60	3600	4000	13200	146.4	155.0	145

Application

The sectors where they are most used are in automation and packaging (ceramics, conveyor belts, automatic warehouses, etc.). The typical applications are primarily concentrated on machines that use both asynchronous motors driven by inverters and brushless ones, especially in intermittent duty. In the first case (replacement of asynchronous motors), they are indicated in all those applications in which the increase in speed leads to an operation at a frequency that is higher than the basic frequency of the motor with a subsequent decrease in torque. Specifically, the application of these motors allows to keep the gear box reduction ratio unchanged while increasing the frequency without problems. Motors in the "R" series offer more adjustment possibilities (wider frequency range), better dynamic characteristics, similar or less energy consumption with smaller motor size and weight at equal power. Using this product instead of an asynchronous motor makes an increase in transmission ratio necessary if you wish to decrease the size of the motor at equal power. The reduction in size and weight at same power is very evident: this translates into a savings for the customer about the cost of the power transmission (as motor unit + gearbox) and the cost of the machine structure. Using these motors makes also possible to rise the lower motor frequency, moving to a speed range that doesn't need a forced cooling system (an appropriate reduction ratio must be chosen). To maximize the advantages, we recommend using a reduction gear unit rather than a worm gearbox. Replacing brushless motors: these are a valid alternative to servo motors in all applications in which a very strong dynamic is not required and in which a strict interpolation between the two motors is not needed. Compared to a brushless motor, the advantages are a reduction in cost, the absence of dedicated cables and connectors, a reduced maintenance and an extremely simple use that does not require specialized staff.
Definitively this new product allows:
- to think in a new way the process regarding the machine motorization
- to use an asynchronous motor instead of a brushless one
- to have smaller and lighter machines than current ones with equal power
- to have greater speed adjustment intervals
- to have an increased efficiency
- to have a reduced inertia at equal power
- to have a product that is simpler to use
- to have the same accessories as the standard product (encoder, power ventilation, etc.)
- to use any type of commercial inverter in the market
- to eliminate forced ventilation in many cases.

Many industrial sectors have standardized certain types and brands of inverters. "R" series motors were designed and optimized to be extremely versatile and able to maintain the same performance with all major commercial drives This feature means not changing its standard and being able to use the most suitable inverter.

Motors for wind generators

Brake motors are used in wind generators to rotate the nacelle according to the wind direction (Yaw) and to position the blades based on the wind direction and its intensity (Pitch).
MGM brake motors have been widely used in this sector for years. This type of application requires high reliability, low maintenance and the possibility of an use in special environments (low temperatures, sandy environments, offshore installations).
For this reason, the motors for this application keep certain features that are common to all motors in the BA and BM series and also specific variants, and that can vary depending upon the type of the wind power plant:

- Suitability for operation with inverter
- Various voltage supplies available for both, motor and brake
- Motor power supply separated from the brake ones
- Low moment of inertia
- Possibility to customize the torque curve as need with limitation of the maximum torque
- Protection rating IP54, IP55, IP56, and IP66
- Possibility of installing bi-metallic thermal protectors (PTO) and thermistors (PTC)
- Encoder mounting (upon request)
- Completely closed brake construction (upon request)
- Availability of brake coils with AC or DC supply (built-in rectifier)
- Possibility of installing microswitches upon request to detect the brake release
- Air gap adjustable in an easy way and continuosly
- Braking torque adjustable in an easy way and continuosly
- Execution for inspection (measurement) of the braking torque (upon request)
- Suitable braking unit to support prolonged slips and at high speed (upon request)
- Low wear of the brake disc linings
- Braking torque stability
- Quick brake intervention
- Locking or non-locking brake release
- Possibility of installing anti-condensation heaters on the motor and on the brake
- Execution for operation for low temperatures (-40° C) available upon request
- Anti-corrosion treatment (upon request)
- Paint depending on the type of installation (for example cycle C5M-H for offshore installations)
- cCSAus certification (upon request)

For the best definition of the type of motor and related variants, we recommend contacting the MGM technical department.

Motors for automatic industrial doors

BM series motors with certain specific variants are widely used in the industrial door sector. Here below some of the features usually requested for this application:

- Manual brake release with automatic return (non-locking)
- Double output shaft ready for the manual door opening system
- Anti sticking system for the brake disc
- Safety microswitch for manual manoeuvres
- Reduced brake response time
- IP55 protection degree
- Silent execution
- Thermal protectors
- Wide terminal board box
- cCSAus or CCC certification

For the best definition of the type of motor and related variants, we recommend to contact MGM organization.

double brake motors

BMBM series

BMBM series motors are designed for intermittent duty S3 25% (see technical data). BMBMX series motors for intermittent duty S3 40% are also available. Consist of asynchronous three phase brake motors with twin DC brakes working independently of each other, starting from 63 up to 315 frame sizes and power range from 0.08 kW up to 132 kW. BMBM series main feature is a very high reliability in those lifting applications where there are high demands of safety and silence. For these reasons BMBM series motors are particularly suitable to be used in TV-cine studios and theatre stages.
The motor brakes in case of power supply failure. The braking action is always secured through a very quick and precise stop assuring a safe and a prompt stop in case of unintentional power supply failure. The brake torque remains the same in both directions of rotation and the braking action occurs without shaft axial sliding. The brake components and assembly are designed with special features to be noiseless during stops. The manual brake release is made up of two levers (one for each brake) so to avoid unwanted starts. It's possible to release the brakes just using one hand.
The two brakes are supplied through independent rectifiers which are positioned in the terminal box. Rectifiers are provided with over-voltage protection device. It's possible to have two types of wirings connection to the rectifier for each brake, in relation to the intervention time required. All BMBM series motors can be driven by inverters. On request, it's possible to have the motor with a built-in encoder or to have the motor ready for the encoder to be easily fitted at customer's place. The brake disc friction material is asbestos free and the brake lining has a high friction factor and is long-lasting. The standard winding insulation class is F. Class H is available upon request. Motor construction type is Totally Enclosed Not Ventilated (TENV) with IP 54 enclosure rating (IP 55 and external cooling are available upon request). BMBM series motors tolerate a high overload level and being not self-cooled have to be used on intermittent duty only.
On request it's possible to provide motors with thermal protection devices (PTO or PTC or KTY), microswitch for brake monitoring (ON/OFF or WEAR function), special double shaft end according to customer design, different types of encoders, different brakes voltage.
Frame is made of die cast aluminium on motors up to 132 frame size and of cast iron on motors from 160 up to 315 frame size. Shields and flanges are made of aluminium up to 90 frame size and of cast iron for above sizes.

Frame size (mm)	Standard brake torque (Nm)	Power consumption (W)
63	2 x 3.5	2 x 22
71	2 x 3.5	2 x 22
80	2 x 7.0	2 x 28
90	2 x 14	2 x 34
100	2 x 28	2 x 42
112	2 x 42	2 x 50
132	2 x 70	2 x 64
160	2 x 107	2 x 76
180	2 x 150	2 x 100
200	2 x 250	2 x 140
225	2 x 375	2 x 140
250	2 x 800	2 x 144
280	2 x 800	2 x 144
315	2 x 1000	2 x 144

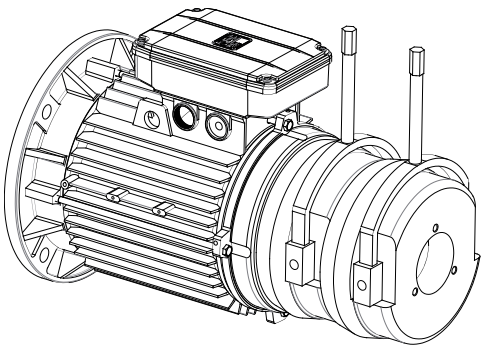

Different brake torques for each of the frame sizes stated here above are available on request. Please contact MGM organization for more information.

Intermittent duty S3 25%

Motor type	Power (kW)	rpm	In (A) 400 V 50 Hz	cos φ	Tn (Nm)	Ts / Tn	Is / In	Brake power (W)	Standard brake torque (Nm)
2 pole - 3000 RPM									
BMBM 63 A2	0.18	2800	0.60	0.71	0.61	3.0	3.5	2 x 22	2 x 3.5
BMBM 63 B2	0.25	2800	0.75	0.76	0.85	3.5	5.0	2 x 22	2 x 3.5
BMBM 63 C2	0.37	2760	1.00	0.80	1.26	2.5	3.8	2 x 22	2 x 3.5
BMBM 71 A2	0.37	2810	0.90	0.78	1.26	2.6	4.5	2 x 22	2 x 3.5
BMBM 71 B2	0.55	2810	1.40	0.78	1.87	2.6	4.5	2 x 22	2 x 3.5
BMBM 71 C2	0.75	2810	1.80	0.80	2.55	2.5	4.5	2 x 22	2 x 3.5
BMBM 80 A2	0.75	2800	1.70	0.86	2.56	3.1	5.3	2 x 28	2 x 7
BMBM 80 B2	1.1	2800	2.40	0.86	3.75	3.1	5.3	2 x 28	2 x 7
BMBM 90 SA2	1.5	2850	3.20	0.86	5.03	3.0	6.9	2 x 34	2 x 14
BMBM 90 LA2	2.2	2840	4.50	0.86	7.40	3.0	6.9	2 x 34	2 x 14
BMBM 100 LA2	3.0	2860	6.20	0.84	10.02	3.2	8.1	2 x 42	2 x 28
BMBM 112 MB2	4.0	2880	8.10	0.84	13.26	2.5	7.4	2 x 50	2 x 42
BMBM 112 MC2	5.5	2880	11.40	0.85	18.24	2.5	7.4	2 x 50	2 x 42
BMBM 132 SA2	5.5	2890	10.8	0.86	18.17	2.8	7.4	2 x 64	2 x 70
BMBM 132 SB2	7.5	2890	14.6	0.85	24.78	2.8	7.4	2 x 64	2 x 70
BMBM 132 MA2	9.2	2890	17.9	0.85	30.40	2.8	7.4	2 x 64	2 x 70
BMBM 132 MB2	11.0	2890	21.4	0.85	36.35	2.8	7.4	2 x 64	2 x 70
BMBM 160 MA2	11.0	2920	19.5	0.94	35.98	3.0	8.8	2 x 76	2 x 107
BMBM 160 MB2	15.0	2930	26.3	0.93	48.89	3.1	8.8	2 x 76	2 x 107
BMBM 160 LA2	18.5	2930	32.4	0.93	60.30	3.1	8.8	2 x 76	2 x 107
BMBM 180 LA2	22.0	2950	36.7	0.95	71.22	2.7	9.0	2 x 100	2 x 150
BMBM 200 LA2	30.0	2940	52.0	0.94	97.45	2.8	9.0	2 x 140	2 x 250
BMBM 200 LB2	37.0	2940	64.1	0.93	120.19	2.8	9.0	2 x 140	2 x 250
4 pole - 1500 RPM									
BMBM 63 A4	0.12	1330	0.45	0.70	0.86	2.0	2.4	2 x 22	2 x 3.5
BMBM 63 B4	0.18	1350	0.60	0.71	1.27	3.0	2.8	2 x 22	2 x 3.5
BMBM 63 C4	0.22	1350	0.75	0.66	1.56	2.8	3.1	2 x 22	2 x 3.5
BMBM 63 D4	0.30	1350	1.05	0.64	2.12	2.8	3.0	2 x 22	2 x 3.5
BMBM 71 A4	0.25	1400	0.80	0.65	1.71	2.5	3.7	2 x 22	2 x 3.5
BMBM 71 B4	0.37	1400	1.10	0.68	2.52	2.7	3.9	2 x 22	2 x 3.5
BMBM 71 C4	0.55	1360	1.65	0.70	3.86	2.4	3.7	2 x 22	2 x 3.5
BMBM 71 D4	0.65	1350	2.00	0.69	4.60	2.1	3.7	2 x 22	2 x 3.5
BMBM 80 A4	0.55	1400	1.70	0.69	3.75	2.1	4.0	2 x 28	2 x 7
BMBM 80 B4	0.75	1400	2.20	0.67	5.12	2.5	4.3	2 x 28	2 x 7
BMBM 80 C4	0.90	1390	2.60	0.68	6.18	2.8	4.5	2 x 28	2 x 7
BMBM 90 SA4	1.10	1400	2.70	0.77	7.50	2.3	4.6	2 x 34	2 x 14
BMBM 90 LA4	1.50	1400	3.60	0.75	10.23	2.7	4.8	2 x 34	2 x 14
BMBM 90 LB4	1.85	1400	4.30	0.77	12.62	2.7	5.8	2 x 34	2 x 14
BMBM 90 LC4	2.2	1390	5.40	0.75	15.12	2.7	5.0	2 x 34	2 x 14
BMBM 100 LA4	2.2	1410	5.00	0.78	14.90	2.5	5.4	2 x 42	2 x 28
BMBM 100 LB4	3.0	1410	6.50	0.80	20.32	2.8	6.4	2 x 42	2 x 28
BMBM 112 MB4	4.0	1415	8.10	0.84	27.00	2.6	6.4	2 x 50	2 x 42
BMBM 112 MC4	5.5	1420	11.50	0.83	36.99	2.8	6.9	2 x 50	2 x 42
BMBM 132 SB4	5.5	1430	11.30	0.82	36.73	2.4	6.0	2 x 64	2 x 70
BMBM 132 MA4	7.5	1435	14.80	0.84	49.91	2.4	6.0	2 x 64	2 x 70
BMBM 132 MB4	9.2	1445	18.30	0.85	60.80	2.5	6.3	2 x 64	2 x 70
BMBM 132 MC4	11.0	1440	21.70	0.86	72.95	2.5	6.0	2 x 64	2 x 70
BMBM 160 MA4	9.2	1460	18.60	0.84	60.18	3.0	7.0	2 x 76	2 x 107
BMBM 160 MB4	11.0	1460	21.20	0.85	71.95	2.9	7.0	2 x 76	2 x 107
BMBM 160 LA4	15.0	1460	28.50	0.87	98.12	2.7	7.0	2 x 76	2 x 107
BMBM 180 LA4	18.5	1460	33.7	0.89	121.01	2.9	8.0	2 x 100	2 x 150
BMBM 180 LB4	22.0	1460	41.8	0.85	143.90	2.5	7.6	2 x 100	2 x 150
BMBM 200 LB4	30.0	1455	56.5	0.87	196.91	2.5	7.4	2 x 140	2 x 250
BMBM 225 S4	37.0	1475	68.1	0.85	239.56	2.5	7.9	2 x 140	2 x 375
BMBM 225 M4	45.0	1475	82.6	0.85	291.36	2.5	7.9	2 x 140	2 x 375

BMBM series dimensions

Intermittent duty S3 25%

Motor type	Power (kW)	rpm	In (A) 400 V 50 Hz	cos φ	Tn (Nm)	Ts / Tn	Is / In	Brake power (W)	Standard brake torque (Nm)
6 pole - 1000 RPM									
BMBM 63 C6	0.09	890	0.50	0.56	0.97	2.4	1.9	2 x 22	2 x 3.5
BMBM 63 D6	0.12	870	0.60	0.60	1.32	2.7	1.9	2 x 22	2 x 3.5
BMBM 71 A6	0.18	875	0.60	0.71	1.96	2.0	2.6	2 x 22	2 x 3.5
BMBM 71 B6	0.25	900	0.80	0.71	2.65	2.0	2.8	2 x 22	2 x 3.5
BMBM 80 A6	0.37	910	1.25	0.67	3.88	2.6	3.4	2 x 28	2 x 7
BMBM 80 B6	0.55	900	1.80	0.68	5.84	2.2	2.8	2 x 28	2 x 7
BMBM 90 SA6	0.75	910	2.30	0.68	7.87	2.1	3.5	2 x 34	2 x 14
BMBM 90 LA6	1.10	910	3.20	0.68	11.54	2.2	3.6	2 x 34	2 x 14
BMBM 90 LB6	1.30	910	3.90	0.68	13.64	2.5	4.0	2 x 34	2 x 14
BMBM 100 LA6	1.50	930	3.90	0.71	15.40	2.3	4.3	2 x 42	2 x 28
BMBM 100 LB6	1.85	920	5.00	0.68	19.20	2.6	4.5	2 x 42	2 x 28
BMBM 112 MB6	2.20	945	5.20	0.79	22.23	2.0	5.3	2 x 50	2 x 42
BMBM 132 SB6	3.00	960	7.20	0.72	29.84	2.5	6.5	2 x 64	2 x 70
BMBM 132 MA6	4.00	960	9.50	0.72	39.79	2.3	6.5	2 x 64	2 x 70
BMBM 132 MB6	5.50	960	12.30	0.75	54.71	2.3	6.5	2 x 64	2 x 70
BMBM 160 MB6	7.50	965	15.90	0.79	74.22	2.2	7.1	2 x 76	2 x 107
BMBM 160 LA6	9.20	970	18.30	0.81	90.58	2.2	7.1	2 x 76	2 x 107
BMBM 160 LB6	11.00	970	22.70	0.80	108.30	2.5	7.5	2 x 76	2 x 107
BMBM 180 LB6	15.00	970	29.40	0.84	147.68	2.3	7.8	2 x 100	2 x 150
BMBM 200 LA6	18.50	970	38.10	0.82	182.14	2.2	8.0	2 x 140	2 x 250
BMBM 200 LB6	22.00	965	43.50	0.85	217.72	2.2	8.0	2 x 140	2 x 250
BMBM 225 M6	30.00	980	60.70	0.78	219.47	2.2	8.0	2 x 140	2 x 375
8 pole - 750 RPM									
BMBM 63 D8	0.07	650	0.45	0.62	1.03	2.2	1.55	2 x 22	2 x 3.5
BMBM 71 A8	0.08	660	0.60	0.53	1.16	2.0	2.0	2 x 22	2 x 3.5
BMBM 71 B8	0.11	660	0.80	0.55	1.59	2.0	2.0	2 x 22	2 x 3.5
BMBM 80 A8	0.18	675	0.95	0.59	2.55	2.0	2.2	2 x 28	2 x 7
BMBM 80 B8	0.25	675	1.25	0.62	3.54	2.0	2.2	2 x 28	2 x 7
BMBM 90 SA8	0.37	690	1.50	0.60	5.12	2.1	2.9	2 x 34	2 x 14
BMBM 90 LA8	0.55	690	2.20	0.56	7.61	2.1	2.8	2 x 34	2 x 14
BMBM 90 LB8	0.65	690	2.70	0.56	9.00	2.1	2.8	2 x 34	2 x 14
BMBM 100 LA8	0.75	700	2.75	0.58	10.23	2.1	3.0	2 x 42	2 x 28
BMBM 100 LB8	1.1	700	4.10	0.59	15.01	2.5	4.0	2 x 42	2 x 28
BMBM 112 MB8	1.5	705	4.90	0.60	20.32	2.0	4.5	2 x 50	2 x 42
BMBM 132 SB8	2.2	700	5.20	0.75	30.01	2.1	4.7	2 x 64	2 x 70
BMBM 132 MB8	3.0	700	7.10	0.75	40.93	2.1	4.7	2 x 64	2 x 70
BMBM 160 MA8	4.0	725	9.60	0.72	52.69	2.3	6.5	2 x 76	2 x 107
BMBM 160 MB8	5.5	725	13.60	0.70	72.45	2.3	6.1	2 x 76	2 x 107
BMBM 160 LA8	7.5	725	18.60	0.70	98.79	2.3	6.1	2 x 76	2 x 107
BMBM 180 LB8	11.0	730	25.90	0.72	143.90	2.0	5.9	2 x 100	2 x 150
BMBM 200 LA8	15.0	730	32.80	0.77	196.23	1.9	6.1	2 x 140	2 x 250
BMBM 225 M8	22.0	735	51.30	0.71	285.85	2.1	6.4	2 x 140	2 x 375

1. Motor characteristic values reported in the tables refer to intermittent duty (S3 25%), voltage 3~400V 50 Hz, ambient temperature max. 40 °C, altitude up to 1000 m. above sea level operating condition. These are TENV motors and they are exempt from efficiency requirements of the regulation (EU) 2019/1781
2. Brake torque values refer to the motors in standard execution, motors with special executions and different brake torque values are available.
3. MGM keeps the data provided as up-to-date and correct as possible.

Since the products are subject to changes and improvements, the data indicated cannot be considered binding. The data indicated must also be understood as being general in nature. For specific applications, please contact the MGM staff.

BMBM series dimensions

Size	63	71	80	90S	90L	100	112	132S	132M	160M	160L	180L	200
A	100	112	125	140	140	160	190	216	216	254	254	279	316
B	80	90	100	100	125	140	140	140	178	210	254	279	305
C	40	45	50	56	56	63	70	89	89	108	108	121	133
D	11	14	19	24	24	28	28	38	38	42	42	48	55
d	M4	M5	M6	M8	M8	M10	M10	M12	M12	M16	M16	M16	M20
E	23	30	40	50	50	60	60	80	80	110	110	110	110
Fa	9.5	9.5	11.5	11.5	11.5	14.5	14.5	14.5	14.5	18.5	18.5	18.5	18.5
Fb	M5	M6	M6	M8	M8	M8	M8	M10	M10				
f	4	5	6	8	8	8	8	10	10	12	12	14	16
g	8.5	11	15.5	20	20	24	24	33	33	37	37	42.5	49
H	63	71	80	90	90	100	112	132	132	160	160	180	200
h	4	5	6	7	7	7	7	8	8	8	8	9	10
I	7	7	9	10	10	12	12	12	12	14	14	14	18
L1	166	180	194	207	232	254	262	248	260	314	337	399	424
Ma	115	130	165	165	165	215	215	265	265	300	300	300	350
Mb	75	85	100	115	115	130	130	165	165				
Na	95	110	130	130	130	180	180	230	230	250	250	250	300
Nb	60	70	80	95	95	110	110	130	130				
Oa	3	3.5	3.5	3.5	3.5	4	4	4	4	5	5	5	5
Ob	2.5	2.5	3	3	3	3.5	3.5	3.5	3.5				
Pa	140	160	200	200	200	250	250	300	300	350	350	350	400
Pb	90	105	120	140	140	160	160	200	200				
Q	298	303	342	380	405	456	491	567	605	719	763	832	873
R1	135	135	135	170	170	170	170	180	180	260	260	260	260
S	10	10	12	12	12	14	14	14	14	15	15	15	18
V	7	8.5	9.5	10.5	10.5	13	13.5	18	18	18	18	21	21
W1	111	120	131	148	148	162	176	196	196	267	267	277	277
Y	85	85	105	130	130	150	170	195	195	225	225	258	306
Z1	86	86	86	112	112	112	112	120	120	184	184	184	184

BMBM B3

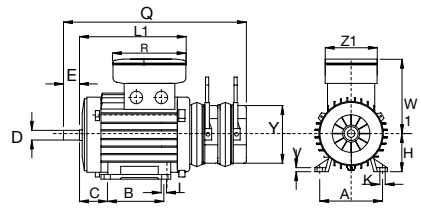

BMBM B5

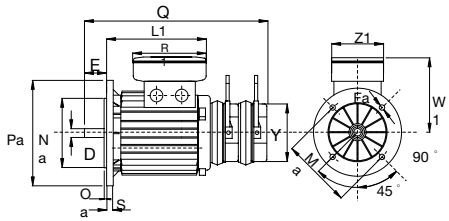

BMBM B14

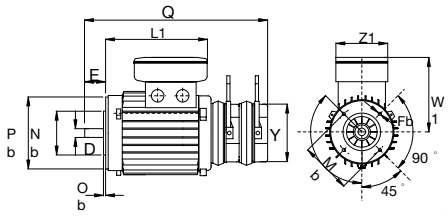

BMBM 160M/L-180L-200 B3

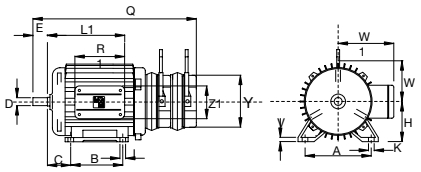

Shaft End

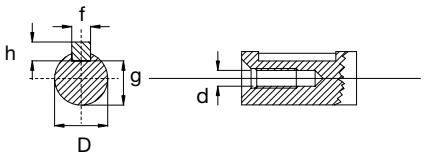

BMBM series

Please contact MGM for further information regarding the dimensions of the motors series BMBM with 225-250-280-315 frame sizes.

USA and Canada

Upon request BA, BAX, BM, BMX brake motors and derivative series can be provided with cCSAus approval (complying with CSA C22.2 No.100 and UL 1004-1 standards). Only cCSAus approved motors show the relevant marking on the nameplate.

It's possible to download the CSA certificate from our website (www.mgmrestop.com) under the section DOCUMENTATION → QUALITY.

Motor sold in USA and in Canada must also comply with the energy efficiency regulation. Single speed, asynchronous motors with and without brake, with power greater than 0.75 kW (from 1HP up to 500HP) and rated for continuous operations are covered by the USA and Canada energy efficiency regulation and need to meet Premium efficiency levels (equivalent to IE3).
Some motors including double speed and intermittent duty motors (S2÷S10) are excluded by the Canadian and American regulations.

MGM brake motors series BAX and BMX with 2, 4, 6 poles and powers from 0.75kW up to 45kW (1HP to 60HP) comply with this regulation. Motors complying with the North American efficiency regulation show the "Certification Compliance Number" (CC number) issued by the US Department of Energy (DOE) and the cCSAus "Energy Verified" mark on the nameplate according to the Canadian regulations. The certification covers various options including thermal protectors and thermistors, space heaters, encoders, etc. Please contact MGM for more information on the available certified options.

For those motors intended for intermittent duty (S2÷S10) and therefore not covered by the efficiency regulation, the brake motors belonging to the BA and BM series can be supplied. In this case on the name plate will be stated the intermittent duty and just the cCSAus logo (but not the CC number and the "Energy Verified" indication).

C US
Energy Verified

The MGM laboratory is certified by CSA (ISO 17025) to perform safety tests required for the cCSAus certification as well as the efficiency tests to determine the motor efficiency. It's possible to download these certificates from our website (www.mgmrestop.com) under the section DOCUMENTATION → QUALITY.

MGM motors can be provided with two different winding configurations: Δ/Y (Delta/Star) 6 wires European standard or Y/YY (Wye/double Wye) 9 wires American standard, 3ph 230/460V 60Hz.

Motors with NEMA flanges and shafts are available on request (see page 9).

In the purchase order it's always necessary to specify the following information to MGM:

- cCSAus certification.
- The required duty (Continuous or Intermittent) in case of single speed motors;
- The motor and brake coil voltage.

SMX series are non-brake 3-phase asynchronous motors with 2, 4, 6 poles and powers from 0.75kW (1HP) up to 45kW (60HP) and comply with the cCSAus standards and energy efficiency regulation. SMX motors series bear the "Certification Compliance Number" along with cCSAus 'Energy Verified' mark on the nameplate.

Premium Efficiency 60Hz (Continuous Duty) series BAX-BMX-SMX

Motor type	Power Hp	Power kW	rpm	In (A) 230V 60Hz	In (A) 460V 60Hz	In (A) 575V 60Hz	cos φ 100%	Eff. 100%	Eff. 75%	Eff. 50%	Tn Nm	Tn lb in	Ts/Tn	Is/In	Code
2 pole - 3600 RPM															
SMX-BMX 63 A2 *	0.25	0.18	3400	1.04	0.52	0.42	0.68	64.00	63.00	56.00	0.51	4.51	3.7	4.8	J
SMX-BMX 63 B2 *	0.33	0.25	3360	1.44	0.72	0.57	0.66	68.00	69.00	62.00	0.71	6.28	3.1	4.0	H
SMX-BMX 71 A2 *	0.50	0.37	3440	1.92	0.96	0.65	0.68	72.00	69.00	62.00	1.03	9.1	3.3	5	J
SMX-BMX 71 B2 *	0.75	0.55	3440	2.80	1.40	1.12	0.67	74.00	72.00	67.00	1.53	13.5	3.3	5.3	J
BAX-BMX-SMX 80 A2	1.0	0.75	3465	3.30	1.65	1.32	0.77	77.00	79.30	74.70	2.08	18.4	3.6	5.8	J
BAX-BMX-SMX 90 SA2	1.5	1.1	3540	4.26	2.13	1.70	0.77	84.00	82.40	77.90	2.97	26.3	4.1	9.3	M
BAX-BMX-SMX 90 LA2	2.0	1.5	3535	5.64	2.82	2.25	0.78	85.50	85.00	81.20	4.05	35.8	5.0	9.3	M
BAX-BMX-SMX 100 LA2	3.0	2.2	3532	8.00	4.00	3.20	0.78	86.50	87.56	85.00	5.94	52.6	5.6	10.0	M
BAX-BMX-SMX 112 MC2	5.0	3.7	3550	12.9	6.45	5.20	0.83	88.50	89.20	87.40	9.95	88.1	6.0	10.8	M
BAX-BMX-SMX 132 SA2	7.5	5.5	3550	18.0	9.00	7.20	0.82	89.50	88.00	86.70	14.8	131.0	4.2	9.8	L
BAX-BMX-SMX 132 SB2	10.0	7.5	3550	24.0	12.0	9.60	0.85	90.20	91.00	89.10	20.2	178.8	4.1	9.3	K
BAX-BMX-SMX 160 MA2	15.0	11.0	3562	36.0	18.0	14.4	0.85	91.00	89.20	88.60	29.5	261.1	5.8	10.3	L
BAX-BMX-SMX 160 MB2	20.0	15.0	3562	48.8	24.4	19.5	0.85	91.00	90.70	89.30	40.2	355.8	4.2	10.3	M
BAX-BMX-SMX 160 LA2	25.0	18.5	3562	58.2	29.1	23.3	0.86	91.70	92.90	91.30	49.6	439.0	4.8	10.6	L
BAX-BMX-SMX 180 LA2	30.0	22.0	3565	68.6	34.3	27.4	0.88	91.70	92.80	91.20	58.9	521.3	5.1	10.4	L
BAX-BMX-SMX 200 LA2	40.0	30.0	3566	92.6	46.3	37.0	0.86	92.40	92.50	91.30	80.3	710.7	6.2	10.0	L
BAX-BMX-SMX 200 LB2	50.0	37.0	3564	113.6	56.8	45.4	0.88	93.00	93.20	92.60	99.1	877.1	5.0	9.8	K
4 pole - 1800 RPM															
SMX-BMX 63 B4 *	0.25	0.18	1670	1.24	0.62	0.5	0.56	68.00	64.00	57.00	1.03	9.1	3.9	3.7	J
SMX-BMX 71 A4 *	0.33	0.25	1680	1.50	0.75	0.6	0.62	70.00	69.40	64.10	1.42	12.6	2.9	4.0	J
SMX-BMX 71 B4 *	0.50	0.37	1690	1.82	0.91	0.73	0.71	72.00	70.00	64.00	2.09	18.5	2.6	4.4	H
SMX-BMX 80 A4 *	0.75	0.55	1710	2.66	1.33	1.06	0.69	75.50	75.10	72.40	3.07	27.2	3.1	5.3	J
BAX-BMX-SMX 80 B4	1.0	0.75	1730	3.20	1.60	1.30	0.70	85.50	85.40	83.40	4.14	36.6	3.6	6.6	K
BAX-BMX-SMX 90 SA4	1.5	1.1	1739	4.60	2.30	1.84	0.68	86.50	85.60	83.30	6.04	53.5	4.1	7.0	K
BAX-BMX-SMX 90 LA4	2.0	1.5	1739	6.20	3.10	2.50	0.70	86.50	86.50	84.20	8.2	72.6	4.1	7.1	K
BAX-BMX-SMX 100 LA4	3.0	2.2	1750	8.60	4.30	3.44	0.73	89.50	88.90	87.00	12.0	106.2	4.1	7.4	K
BAX-BMX-SMX 112 MB4	4.0	3.0	1757	11.2	5.60	4.50	0.75	89.50	89.40	87.40	16.3	144.3	4.2	9.1	M
BAX-BMX-SMX 112 MC4	5.0	3.7	1757	14.0	7.00	5.60	0.73	89.50	89.40	87.10	20.1	177.9	4.0	8.8	L
BAX-BMX-SMX 132 SB4	7.5	5.5	1765	19.6	9.80	7.84	0.77	91.70	90.70	89.30	29.8	263.8	4.0	8.7	L
BAX-BMX-SMX 132 MA4	10.0	7.5	1765	26.4	13.2	10.6	0.78	91.70	92.00	91.10	40.6	359.3	3.7	9.1	L
BAX-BMX-SMX 160 MA4	12.5	9.2	1770	33.2	16.6	13.3	0.76	91.70	92.10	90.60	49.6	439.0	5.0	9.5	M
BAX-BMX-SMX 160 MB4	15.0	11.0	1768	39.2	19.6	15.7	0.80	92.40	92.90	92.40	59.4	525.7	4.2	8.3	K
BAX-BMX-SMX 160 LA4	20.0	15.0	1768	52.6	26.3	21.0	0.77	93.00	93.20	93.00	81.0	716.9	4.1	8.0	K
BAX-BMX-SMX 180 LA4	25.0	18.5	1778	65.2	32.6	26.1	0.76	93.60	93.30	92.00	99.4	879.8	4.7	8.0	K
BAX-BMX-SMX 180 LB4	30.0	22.0	1775	75.0	37.5	30.0	0.78	93.60	93.00	92.30	118.4	1047.9	4.0	6.9	H
BAX-BMX-SMX 200 LB4	40.0	30.0	1777	94.0	47.0	37.6	0.86	94.10	94.30	93.70	162.0	1433.8	3.4	9.4	K
BAHX-BMX-SMX 225 S4	50.0	37.0	1779	115.6	57.8	46.2	0.85	94.50	94.70	94.00	198.6	1757.8	3.3	9.5	K
BAHX-BMX-SMX 225 M4	60.0	45.0	1779	138.4	69.2	55.4	0.86	95.00	95.20	94.20	241.6	2138.3	3.3	9.5	K
6 poli - 1200 RPM															
BAX-BMX-SMX 90 LA6	1.0	0.75	1140	3.50	1.75	1.40	0.66	82.50	82.20	79.30	6.3	55.8	5.1	8.3	N
BAX-BMX-SMX 100 LA6	1.5	1.1	1160	5.10	2.55	2.04	0.63	87.50	87.70	84.30	9.1	80.5	4.5	8.5	N
BAX-BMX-SMX 112 MB6	2.0	1.5	1170	6.34	3.17	2.54	0.67	88.50	88.70	85.30	12.2	108.0	3.0	7.9	L
BAX-BMX-SMX 132 SB6	3.0	2.2	1172	8.80	4.40	3.52	0.70	89.50	89.70	86.30	17.9	158.4	4.7	8.9	N
BAX-BMX-SMX 132 MA6	4.0	3.0	1172	12.0	6.00	4.80	0.70	89.50	89.70	87.70	24.4	216.0	4.1	7.5	K
BAX-BMX-SMX 132 MB6	5.0	3.7	1172	15.6	7.80	6.24	0.66	89.50	89.00	86.70	29.7	266.4	4.1	7.6	L
BAX-BMX-SMX 160 MA6	7.5	5.5	1175	20.2	10.1	8.10	0.75	91.00	91.10	87.80	44.7	395.6	3.7	8.6	L
BAX-BMX-SMX 160 MB6	10.0	7.5	1175	28.4	14.2	11.4	0.73	91.00	91.10	87.80	61.0	539.9	3.6	8.3	L
BAX-BMX-SMX 160 LA6	12.5	9.2	1177	34.0	17.0	13.6	0.71	91.00	91.10	87.80	74.6	660.3	4.8	9.8	M
BAX-BMX-SMX 160 LB6	15.0	11	1175	39.2	19.6	15.7	0.75	91.70	91.80	88.50	89.4	791.3	4.0	8.7	L
BAX-BMX-SMX 180 LB6	20.0	15	1175	56.0	28.0	22.4	0.73	91.70	91.80	90.20	121.9	1078.9	3.6	8.9	L
BAX-BMX-SMX 200 LA6	25.0	18.5	1181	66.6	33.3	26.6	0.75	93.00	93.20	89.80	149.6	1324.1	2.2	7.5	J
BAX-BMX-SMX 200 LB6	30.0	22	1180	76.2	38.1	30.5	0.78	93.00	93.20	89.80	178.0	1575.4	2.2	7.5	J
BAHX-BMX-SMX 225 M6	40.0	30	1188	101.2	50.6	40.5	0.79	94.10	94.40	94.00	241.2	2134.8	3.6	8.3	K
BAHX-BMX-SMX 250 M6	50.0	37	1188	125.0	62.5	50.0	0.79	94.10	94.40	94.00	297.4	2632.2	3.6	8.3	K

The '*' beside the motor type identifies motors with IE2 efficiency class.

1. Motor characteristic values reported on the tables, refer to operating conditions at a maximum ambient temperature of 40 °C and an altitude up to 1000 m. above sea level.
2. MGM Motori Elettrici S.p.A. has made every effort to make this data complete and accurate. Since products are continuously being improved, all data is subject to change or correction. The data presented here is for general information to provide an overview of MGM capabilities. For specific applications, installation and operating instructions, certified dimensions, capabilities and performance data, and pricing and availability, contact MGM staff.

NEMA Execution

BA-BAX

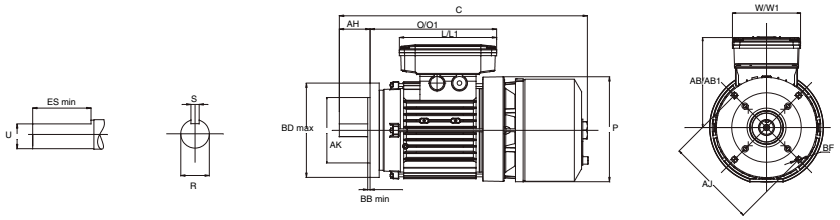

IEC frame size	NEMA flange size	Shaft					Overall dimension						C-Face				
		AH	ES min	U	R	S	C	P	L1	01	AB1	W1	BB min	AK	AJ	BF	BD max
71	56C	2.06	1.41	0.6250	0.517	0.188	15.093	5.709	5.315	7.756	4.764	3.386	0.16	4.500	5.875	4x3/8-16	6.50
80	56C	2.06	1.41	0.6250	0.517	0.188	16.063	6.299	5.315	8.386	5.118	3.386	0.16	4.500	5.875	4x3/8-16	6.50
90 S	145TC-143TC	2.12	1.41	0.8750	0.771	0.188	17.047	7.087	6.693	8.583	5.827	4.409	0.16	4.500	5.875	4x3/8-16	6.50
90 L	145TC-143TC	2.12	1.41	0.8750	0.771	0.188	18.031	7.087	6.693	9.567	5.827	4.409	0.16	4.500	5.875	4x3/8-16	6.50
100	182TC-184TC	2.62	1.78	1.1250	0.986	0.250	20.118	7.717	6.693	10.295	6.378	4.409	0.25	8.500	7.250	4x1/2-13	9.00
112	182TC-184TC	2.62	1.78	1.1250	0.986	0.250	20.827	8.583	6.693	10.787	6.929	4.409	0.25	8.500	7.250	4x1/2-13	9.00
132 S	213TC-215TC	3.12	2.41	1.3750	1.201	0.312	23.780	10.433	7.835	10.242	8.268	5.945	0.25	8.500	7.250	4x1/2-13	9.00
132 M	213TC-215TC	3.12	2.41	1.3750	1.201	0.312	25.276	10.433	7.835	11.738	8.268	5.945	0.25	8.500	7.250	4x1/2-13	9.00
160 M	254TC-256TC	3.75	2.91	1.625	1.416	0.375	29.331	12.756	10.551	12.900	9.685	6.575	0.25	8.500	7.250	4x1/2-13	9.724
160 L	254TC-256TC	3.75	2.91	1.625	1.416	0.375	31.063	12.756	10.551	14.632	9.685	6.575	0.25	8.500	7.250	4x1/2-13	9.724
180	284TD-286TD	4.62	3.28	1.875	1.591	0.500	35.866	14.055	10.551	15.984	10.472	6.575	0.25	11.000	12.500	4x0.81	14.00
180	284TC-286TC	4.38	3.28	1.875	1.591	0.500	33.701	14.055	10.551	15.984	10.472	6.575	0.25	10.500	9.000	4x1/2-13	11.25

BM-BMX

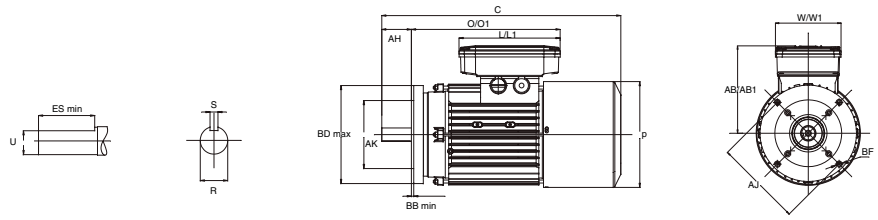

IEC frame size	NEMA flange size	Shaft					Overall dimension						C-Face				
		AH	ES min	U	R	S	C	P	L1	01	AB1	W1	BB min	AK	AJ	BF	BD max
71	56C	2.06	1.41	0.6250	0.517	0.188	13.071	5.354	5.315	7.756	4.764	3.386	0.16	4.500	5.875	4x3/8-16	6.50
80	56C	2.06	1.41	0.6250	0.517	0.188	14.094	6.024	5.315	8.386	5.118	3.386	0.16	4.500	5.875	4x3/8-16	6.50
90 S	145TC-143TC	2.12	1.41	0.8750	0.771	0.188	14.843	7.009	6.693	8.583	5.827	4.409	0.16	4.500	5.875	4x3/8-16	6.50
90 L	145TC-143TC	2.12	1.41	0.8750	0.771	0.188	15.827	7.009	6.693	9.567	5.827	4.409	0.16	4.500	5.875	4x3/8-16	6.50
100	182TC-184TC	2.62	1.78	1.1250	0.986	0.250	18.110	7.795	6.693	10.295	6.378	4.409	0.25	8.500	7.250	4x1/2-13	9.00
112	182TC-184TC	2.62	1.78	1.1250	0.986	0.250	19.311	8.642	6.693	10.787	6.929	4.409	0.25	8.500	7.250	4x1/2-13	9.00
132 S	213TC-215TC	3.12	2.41	1.3750	1.201	0.312	22.382	10.039	7.835	10.242	8.268	5.945	0.25	8.500	7.250	4x1/2-13	9.00
132 M	213TC-215TC	3.12	2.41	1.3750	1.201	0.312	23.878	10.039	7.835	11.738	8.268	5.945	0.25	8.500	7.250	4x1/2-13	9.00
160 M	254TC-256TC	3.75	2.91	1.625	1.416	0.375	28.346	11.535	10.551	12.900	9.685	6.575	0.25	8.500	7.250	4x1/2-13	9.724
160 L	254TC-256TC	3.75	2.91	1.625	1.416	0.375	30.079	11.535	10.551	14.632	9.685	6.575	0.25	8.500	7.250	4x1/2-13	9.724
180	284TD-286TD	4.62	3.28	1.875	1.591	0.500	36.063	13.976	10.551	15.984	10.472	6.575	0.25	11.000	12.500	4x0.81	14.00
180	284TC-286TC	4.38	3.28	1.875	1.591	0.500	33.701	13.976	10.551	15.984	10.472	6.575	0.25	10.500	9.000	4x1/2-13	11.25

SM-SMX

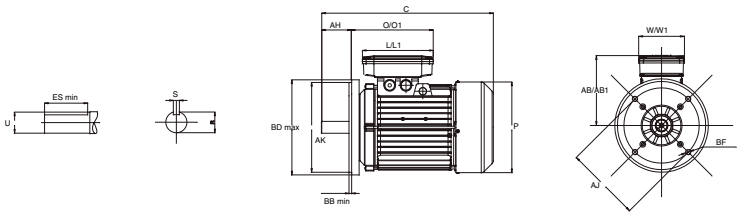

IEC frame size	NEMA flange size	Shaft					Overall dimension										C-Face				
		AH	ES min	U	R	S	C	P	L	L1	0	01	AB	AB1	W	W1	BB min	AK	AJ	BF	BD max
71	56C	2.06	1.41	0.6250	0.517	0.188	11.380	5.096	3.150	5.315	5.197	6.614	4.134	4.764	2.953	3.386	0.16	4.500	5.875	4x3/8-16	6.50
80	56C	2.06	1.41	0.6250	0.517	0.188	12.165	6.693	3.150	5.315	5.276	6.732	4.449	5.118	2.953	3.386	0.16	4.500	5.875	4x3/8-16	6.50
90 S	145TC-143TC	2.12	1.41	0.8750	0.771	0.188	12.795	7.283	3.878	6.693	6.161	8.583	5.000	5.827	3.878	4.409	0.16	4.500	5.875	4x3/8-16	6.50
90 L	145TC-143TC	2.12	1.41	0.8750	0.771	0.188	13.780	7.283	3.878	6.693	6.161	8.704	5.000	5.827	3.878	4.409	0.16	4.500	5.875	4x3/8-16	6.50
100	182TC-184TC	2.62	1.78	1.1250	0.986	0.250	15.827	7.835	3.878	6.693	6.490	7.907	5.433	6.378	3.878	4.409	0.25	8.500	7.250	4x1/2-13	9.00
112	182TC-184TC	2.62	1.78	1.1250	0.986	0.250	16.270	8.580	3.878	6.693	6.549	7.970	6.220	6.929	3.878	4.409	0.25	8.500	7.250	4x1/2-13	9.00
132 S	213TC-215TC	3.12	2.41	1.3750	1.201	0.312	18.320	10.240	4.252	7.835	7.165	8.720	7.795	8.268	4.252	5.945	0.25	8.500	7.250	4x1/2-13	9.00
132 M	213TC-215TC	3.12	2.41	1.3750	1.201	0.312	19.823	10.240	4.252	7.835	7.165	8.720	7.795	8.268	4.252	5.945	0.25	8.500	7.250	4x1/2-13	9.00
160 M	254TC-256TC	3.75	2.91	1.625	1.416	0.375	23.780	11.535		10.551		12.900		9.685		6.575	0.25	8.500	7.250	4x1/2-13	9.724
160 L	254TC-256TC	3.75	2.91	1.625	1.416	0.375	25.512	11.535		10.551		14.632		9.685		6.575	0.25	8.500	7.250	4x1/2-13	9.724
180	284TD-286TD	4.62	3.28	1.875	1.591	0.500	28.882	13.976		10.551		15.984		10.472		6.575	0.25	11.000	12.500	4x0.81	14.00
180	284TC-286TC	4.38	3.28	1.875	1.591	0.500	27.520	13.976		10.551		15.984		10.472		6.575	0.25	10.500	9.000	4x1/2-13	11.25

Dimensions are in inch (1inch= 25.4 mm).

For the dimenions of the IEC motors refer to page 38 for BA-BAX series and to page 49 for BM-BMX series.

BIS certification (Indian standard IS 12615: 2018) is mandatory in India for both standard motors (without brake) and brake motors.

Certified motors stated the ISI marking on the nameplate.

MGM has certified BAX and BMX series brake motors and SMX series motors (standard motors without brake) with a power between 0.12 kw and 55 kw with 2, 4 and 6 poles.The tables below show the motors of the BAX and BMX and SMX series that can be supplied and their relative certification (BIS only or both CE and BIS), based on the required efficiency class.

When ordering it is necessary to specify 'Certification for India' in addition to the characteristics of the motor and the required efficiency class.

2 Pole

Series	Type	Pole	Power (kW) 50Hz	BIS	CE + BIS
SMX-BMX	56 B2	2	0,12	-	IE2
SMX-BMX	63 A2	2	0,18	-	IE2
SMX-BMX	63 B2	2	0,25	-	IE2
SMX-BMX-BAX	71 A2	2	0,37	-	IE2 o IE3
SMX-BMX-BAX	71 B2	2	0,55	-	IE2 o IE3
SMX-BMX-BAX	80 A2	2	0,75	IE2	IE3
SMX-BMX-BAX	80 B2	2	1,1	IE2	IE3
SMX-BMX-BAX	90 SA2	2	1,5	IE2	IE3
SMX-BMX-BAX	90 LA2	2	2,2	IE2	IE3
SMX-BMX-BAX	100 LB2	2	3,0	IE2	IE3
SMX-BMX-BAX	100 LC2	2	3,7	IE2	-
SMX-BMX-BAX	112 MC2	2	3,7	-	IE3
SMX-BMX-BAX	132 SA2	2	5,5	IE2	IE3
SMX-BMX-BAX	132 SB2	2	7,5	IE2	IE3
SMX-BMX-BAX	160 MA2	2	11	IE2	IE3
SMX-BMX-BAX	160 MB2	2	15	IE2	IE3
SMX-BMX-BAX	160 LA2	2	18,5	IE2	IE3
SMX-BMX-BAX	180 LA2	2	22	IE2	IE3
SMX-BMX-BAX	200 LA2	2	30	IE2	IE3
SMX-BMX-BAX	200 LB2	2	37	IE2	IE3

6 Pole

Series	Type	Pole	Power (kW) 50Hz	BIS	CE + BIS
SMX-BMX	63 D6	6	0,12	-	IE2
SMX-BMX-BAX	71 A6	6	0,18	-	IE2
SMX-BMX-BAX	71 B6	6	0,25	-	IE2
SMX-BMX-BAX	80 A6	6	0,37	-	IE2 o IE3
SMX-BMX-BAX	80 B6	6	0,55	-	IE2 o IE3
SMX-BMX-BAX	90 SA6	6	0,75	IE2	IE3
SMX-BMX-BAX	90 LA6	6	1,1	IE2	IE3
SMX-BMX-BAX	100 LA6	6	1,5	IE2	IE3
SMX-BMX-BAX	112 MC6	6	2,2	IE2	IE3
SMX-BMX-BAX	132 SC6	6	3,7	IE2	IE3
SMX-BMX-BAX	132 MB6	6	5,5	IE2	IE3
SMX-BMX-BAX	160 MB6	6	7,5	IE2	IE3
SMX-BMX-BAX	160 LB6	6	11	IE2	IE3
SMX-BMX-BAX	180 LB6	6	15	IE2	IE3
SMX-BMX-BAX	200 LA6	6	18,5	IE2	IE3
SMX-BMX-BAX	200 LB6	6	22	IE2	IE3
SMX-BMX-BAX	225 M6	6	30	IE2	IE3
SMX-BMX-BAX	250 M6	6	37	IE2	IE3

4 Pole

Series	Type	Pole	Power (kW) 50Hz	BIS	CE + BIS
SMX-BMX	63 A4	4	0,12	-	IE2
SMX-BMX	63 B4	4	0,18	-	IE2
SMX-BMX	63 C4	4	0,22	-	IE2
SMX-BMX-BAX	71 A4	4	0,25	-	IE2
SMX-BMX-BAX	71 B4	4	0,37	-	IE2 o IE3
SMX-BMX-BAX	71 C4	4	0,55	-	IE2
SMX-BMX-BAX	80 A4	4	0,55	-	IE2
SMX-BMX-BAX	80 B4	4	0,75	IE2	IE3
SMX-BMX-BAX	90 SA4	4	1,1	IE2	IE3
SMX-BMX-BAX	90 LA4	4	1,5	IE2	IE3
SMX-BMX-BAX	100 LA4	4	2,2	IE2	IE3
SMX-BMX-BAX	112 MC4	4	3,7	IE2	IE3
SMX-BMX-BAX	132 SB4	4	5,5	IE2	IE3
SMX-BMX-BAX	132 MA4	4	7,5	IE2	IE3
SMX-BMX-BAX	160 MB4	4	11	IE2	IE3
SMX-BMX-BAX	160 LA4	4	15	IE2	IE3
SMX-BMX-BAX	180 LA4	4	18,5	IE2	IE3
SMX-BMX-BAX	180 LB4	4	22	IE2	IE3
SMX-BMX-BAX	200 LB4	4	30	IE2	IE3
SMX-BMX-BAX	225 S4	4	37	IE2	IE3
SMX-BMX-BAX	225 M4	4	45	IE2	IE3
SMX-BMX-BAX	250 M4	4	55	IE2	IE3

For the 2,4,6 pole motors listed above, they can also be supplied with accessories such as encoders, servo-ventilation, PTC, PTO, heaters, Microswitches, K disc, flywheel, double brake disc. The motors are available with protection degree from IP54 to IP66 and with AC or DC brake. Contact MGM for more information on the available range.

China

Both standard (without brake) and brake motors for China must comply with two requirements: CCC marking (safety aspects) and minimum efficiency class:

- CCC marking: applies to motors with power P≤ 2.2 kw (2-pole), P≤1.1 kw (4-pole), P≤ 0.75 kw (6 pole), P ≤ 0.55 kw (8 pole).

- Efficiency class (CHINA ENERGY LABEL): applies to single speed motors with power P ≥ 0.12 kw and the minimum efficiency class required is IE3 (corresponding to grade 3 required by the Chinese standard), furthermore those with P ≥ 0.75 kw must have the specific CEL label (China Energy Label).

The following are the standard and brake MGM motors that can be supplied (with CCC, CCC and CEL, CEL only). All motors also states the CE marking on the motor nameplate.

2 Pole - IE3

Type	kW	CCC	CEL
BM56 A2 (*)	0.09		
BMX 56 B2	0.12		
BMX 63 A2	0.18		
BMX 63 A2	0.25		
BAX-BMX 71 A2	0.37		
BAX-BMX 71 B2	0.55		
BAX-BMX-SMX 80 A2	0.75		
BAX-BMX-SMX 80 B2	1.1		
BAX-BMX-SMX 90 SA2	1.5		
BAX-BMX-SMX 90 LA2	2.2		
BAX-BMX-SMX 100 LB2	3		
BAX-BMX-SMX 112 MC2	4		
BAX-BMX-SMX 132 SA2	5.5		
BAX-BMX-SMX 132 SB2	7.5		
BAX-BMX-SMX 160 MA2	11		
BAX-BMX-SMX 160 MB2	15		
BAX-BMX-SMX 160 LA2	18.5		

4 Pole - IE3

Type	kW	CCC	CEL
BM56 A4 (*)	0.06		
BM56 B4 (*)	0.09		
BMX 63 A4	0.12		
BMX 63 B4	0.18		
BAX-BMX 71 A4	0.25		
BAX-BMX 71 B4	0.37		
BAX- BMX 80 A4	0.55		
BAX-BMX-SMX 80 B4	0.75		
BAX-BMX-SMX 90 SA4	1.1		
BAX-BMX-SMX 90 LA4	1.5		
BAX-BMX-SMX 100 LA4	2.2		
BAX-BMX-SMX 112 MB4	3		
BAX-BMX-SMX 112 MC4	4		
BAX-BMX-SMX 132 SB4	5.5		
BAX-BMX-SMX 132 MA4	7.5		
BAX-BMX-SMX 160 MB4	11		
BAX-BMX-SMX 160 LA4	15		

6 Pole - IE3

Type	kW	CCC	CEL
BM56 A6 (*)	0.04		
BM56 B6 (*)	0.06		
BMX 63 D6	0.12		
BAX-BMX 71 A6	0.18		
BAX-BMX 71 B6	0.25		
BAX-BMX 80 A6	0.37		
BAX-BMX 80 B6	0.55		
BAX-BMX 90 SA6	0.75		
BAX-BMX 90 LA6	1.1		
BAX-BMX 100 LA6	1.5		
BAX-BMX 112 MC6	2.2		
BAX-BMX 132 SB6	3		
BAX-BMX 132 MA6	4		
BAX-BMX 132 MB6	5.5		
BAX-BMX 160 MB6	7.5		
BAX-BMX 160 LB6	11		

(*) According to the relevant standard, the efficiency classification starts from 0.12 kW power, therefore the motors marked with an asterisk they have no indicator on the nameplate of the efficiency class.

Available options / variants:
- B3 footmounting, B5 or B14 flange.
- Double shaft, special shafts dimensions, shafts or flanges according to NEMA standard
- AC and DC brake
- Protection degree IP54 or IP55
- Simple or double terminal block
- Side terminal box
- Hand brake release (BM Series)

To order a motor that complies with the above requirements for China, it is necessary to specify 'China Certification' when ordering.

Contact MGM for more information.

Russia, Belarus, Kazakhstan, Kyrgyzstan, Armenia

On request motors with EAC marking can be supplied for the countries of the Eurasian Customs Union (Russia, Belarus, Kazakhstan, Kyrgyzstan, Armenia).

To order motors with this marking it is necessary to specify when ordering 'EAC marking'.

Contact MGM for more information.

Australia and New Zealand

The GEMS (Greenhouse and Energy Minimum Standards) regulation in force in Australia and New Zealand establishes the minimum efficiency values of asynchronous three-phase motors, single speed, 2,4,6,8 poles with rating power from 0.73 kW to 185 kW. They are excluded from the application of this regulation some types of motors (for example two-speed motors or S2 duty motors).
For more information MGM.

In various countries of the world in addition to those already mentioned (Europe, USA, Canada, India, China, Australia and New Zealand) there are specific regulations on the minimum efficiency of the motors. These regulations differ in scope, efficiency limit values, exclusions, labeling or mandatotory registrations. Furthermore, these regulations are periodically updated with even substantial changes. They are in effect only by way of example of the regulations on the minimum efficiency of motors in Korea, Japan, Saudi Arabia, Mexico, Brazil, Colombia, etc. It is therefore recommended when defining a new order to verify the presence of these regulations in the country concerned and to contact us for further information.

Recovery/disposal

The motor must be disposed in compliance with the regulations in force in the country of installation.

The crossed-out bin symbol, shown on the nameplate, indicates that the product, at the end of its useful life, must not be disposed as mixed urban waste but must be collected separately from other waste and sent for recovery or possible disposal according to specific methods to avoid possible negative effects on the environment and health and to encourage the reuse and / or recycling of materials of which the motor is composed.

Most of the motors components are made with materials (steel, copper, aluminium, etc.) that can be reused / recycled thus contributing to the protection of the environment.

Here is, as general indication, some information on the various materials of the motor components:

aluminium (e.g .: frame 56-132, flanges B5 / B14 and shields B3 56-90, Endshield Brake Side BA 71-112, Endshield Brake Side BM 56-80, double terminal box and cover (63-180);
steel and cast iron (e.g .: 160-315 frame, Brake Friction Surface, moving element, B5 / B14 flange and B3 100-315 shields, Endshield Brake Side BA 132- 315, Endshield Brake Side BM 90-225, double terminal box and cover 200-315, motor shaft, key, stator, fan cover, brake cover, encoder protection cover, bearings, screws and tie rods, BA brake release screw, brake springs, brake adjusters, brake coil core, Stainless steel plate, Hexagonal Rear Nut BA 132-315);
copper (eg: stator winding and electromagnet winding);
paper and cardboard (eg: packaging box, user and maintenance manual);
plastic and rubber (ex: cable gland, O-rings, fan, terminal box gaskets, single terminal box cover 63-90, Hexagonal Rear Nut BA 71-112);
electronic components (eg: rectifier, RC filter, encoder);

For more information on disposal/recovery methods or specific information on the motor components materials visit our website (www.mgmrestop.com) or contact MGM.

packaging

MGM motors from 56 up to 315 frame size are individually packed in a box which externally reports the motor identification data (motor code, motor code barcode, motor description, motor serial number). The table below shows the boxes dimensions for each size. Motors with frame size 160 up to 225 are fixed down to pallets with squared timbers. Pallets have EURO overall dimensions (120 x 80 cm). Additional protective materials as cardboard and shrink film around the pallet are used for sea and air shipments.

Motor size	Depth (cm)	Width (cm)	Height (cm)
Brake motor frame size 56 mm	38	19	22
Brake motor frame size 63 mm	38	19	22
Brake motor frame size 71 mm	38	19	22
Brake motor frame size 80 mm	49	23	27
Brake motor frame size 90 mm	49	23	27
Brake motor frame size 100 mm	54	29	35
Brake motor frame size 112 mm	54	29	35
Brake motor frame size 132 mm	69	35	42
Brake motor frame size 160 mm*	93	63	52
Brake motor frame size 180 mm*	93	63	52
Brake motor frame size 200 mm*	93	63	52
Brake motor frame size 225 mm	120	80	70
Brake motor frame size 250-280 mm	135	80	80

BAF-BAPV 71 series-motors are packed into boxes with a dimension of 49 x 23 x 27 cm.

Motors highlighted with * can be delivered either inside a box or fixed on the pallet.
On request for a high quantity batch of the same motor size it's possible to pack the motors directly in a single big box (MULTIPACK). Motors are arranged in carton layers in order to protect goods integrity. The drawing here below shows the box overall dimension while the chart shows the batch quantity that can be inserted in each MULTIPACK box according to the frame size.

The stated quantity has to be considered an approximate quantity as it changes with the required motor mounting (B3, B5, B14 etc.).

Frame Size	Quantity
56-63	80
71	40
80	30
90	20

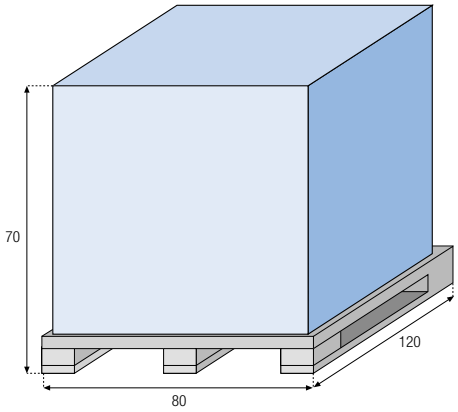

Terms and Conditions of Sale and warranty

All goods manufactured or supplied by MGM motori elettrici SpA shall be subject to MGM terms and conditions of sale and warranty listed on the MGM internet site **www.mgmrestop.com**

The table below shows the available main special features and the options for MGM motors. Letter S stands for “Standard”, letter R stands for “on Request” and letter N stands for “unavailable”.

Ref.	Description		BM	BA
1	Non-standard flange		R	R
2	Special motor shaft as per drawing		R	R
3	Motors with feet and flange (IM B35 and IM B34 with corresponding vertical mounting)		R	R
4	Balancing for reduced or special vibration level		R	R
5	Separate brake supply (two different terminal boards)	1	R	R
6	IP 55 or IP 56 Enclosure rating (protection degree)		R	R
7	Special motor/brake voltage or frequency supply		R	R
8	Motor Insulation Class H		R	R
9	Brake torque and/or air gap pre-adjustment to desired value		R	R
10	cCSAus or cCSAus Energy Efficincy marking		R	R
11	CCC marking and/or China Energy Label (CEL)		R	R
12	EAC marking		R	R
13	BIS marking		R	R
14	Standstill heating		R	R
15	Bimetallic thermal protectors PTO or Thermistors PTC		R	R
16	Tropicalization treatment of motor windings		R	R
17	Over-voltage safety cutout (RC04 and RC10)		R	R
18	Terminal box on the right (left) side for IM B3 (BA 80-132)		N	R
19	Double shaft end	2	R	R
20	Test certificate		R	R
21	Rain roof (BM), special fan cover for outside vertical mounting		R	N
22	Brake cover (BA), special brake cover for outside vertical mounting		N	R
23	Precise tolerance class		R	R
24	Fan cover for textile environment	4	R	S
25	Motor with built-in encoder or tachogenerator	2	R	R
26	Motor arranged for manual rotation (shaft fitted with hexagonal hole at non-drive end)	3	S	S
27	Special finishing (marine environment, washdown applications)		R	R
28	Manual brake release screws	2	N	S
29	Manual return brake release lever		R	R
30	T key for manual shaft rotation		R	R
31	Stainless steel tie rods, bolts, nuts and screws		R	R
32	Forced cooling motor (SV, AV series)		R	R
33	Motor with additional cable gland holes		R	R
34	Drain holes		R	R
35	Stainless steel friction surface		R	R
36	Brake release microswitch or inductive sensor		R	R
37	Inductive sensor or microswitch detector of the brake disc wear		R	R

1

Double terminal board box for brake separate supply is provided as standard on BM and BA two speed motors while it’s on request only on single speed motors.

2

Brake manual release screw is not provided as standard on BA motors with double shaft end or with encoder or techogenerator.

3

Motor with frame size up to 132 are fitted as standard with hexagonal hole at Non-Drive end. The hexagonal hole is available on request on motors with frame size 160 and above.

4

BA series motors don’t need the fan cover for textile environment.

spare parts

To clearly identify a spare part it's necessary to provide the item number (shown on the drawing below), the motor type, the rated voltage and frequency supply for electric parts such as the stator, the brake coil and the rectifier.

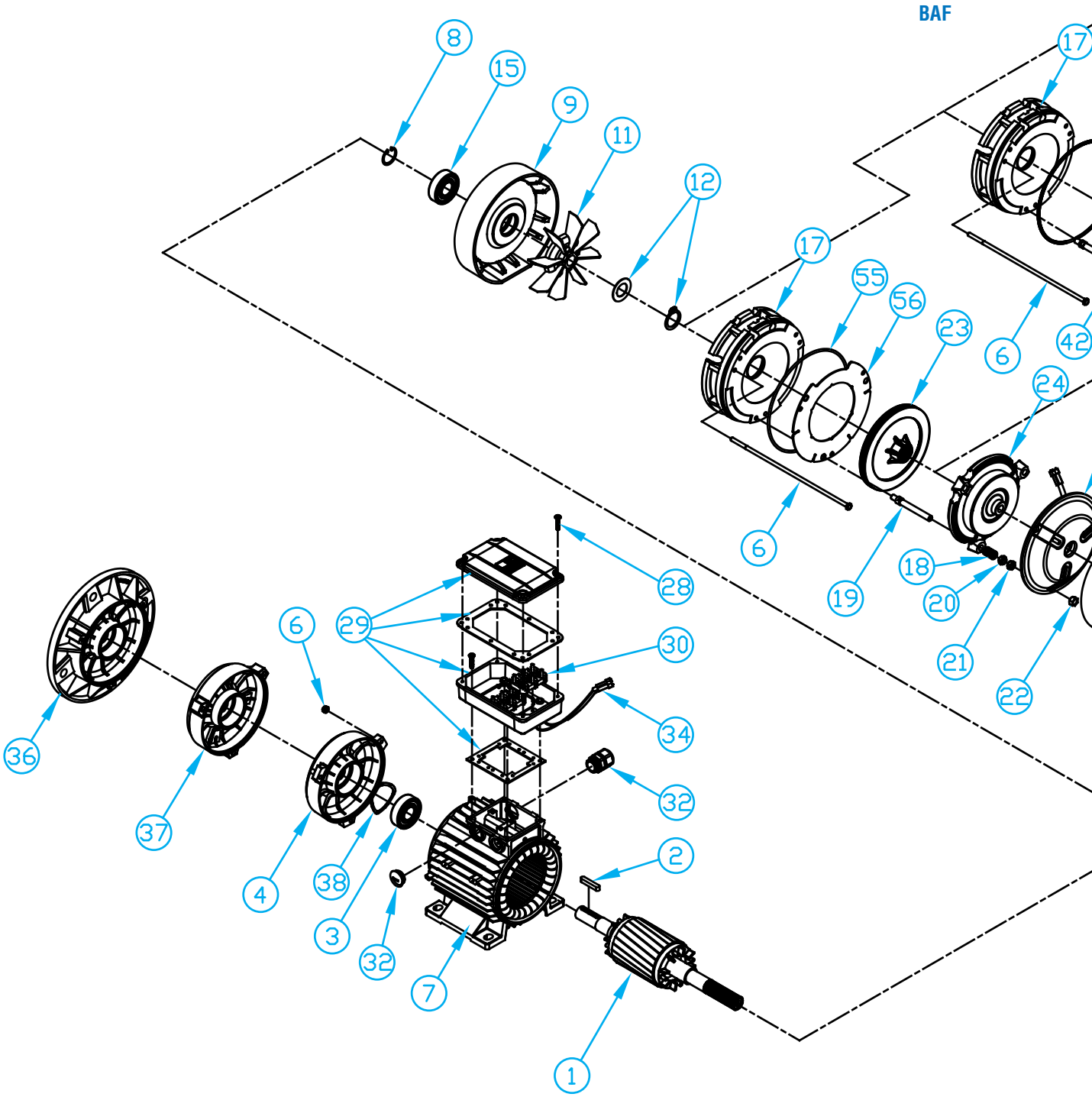

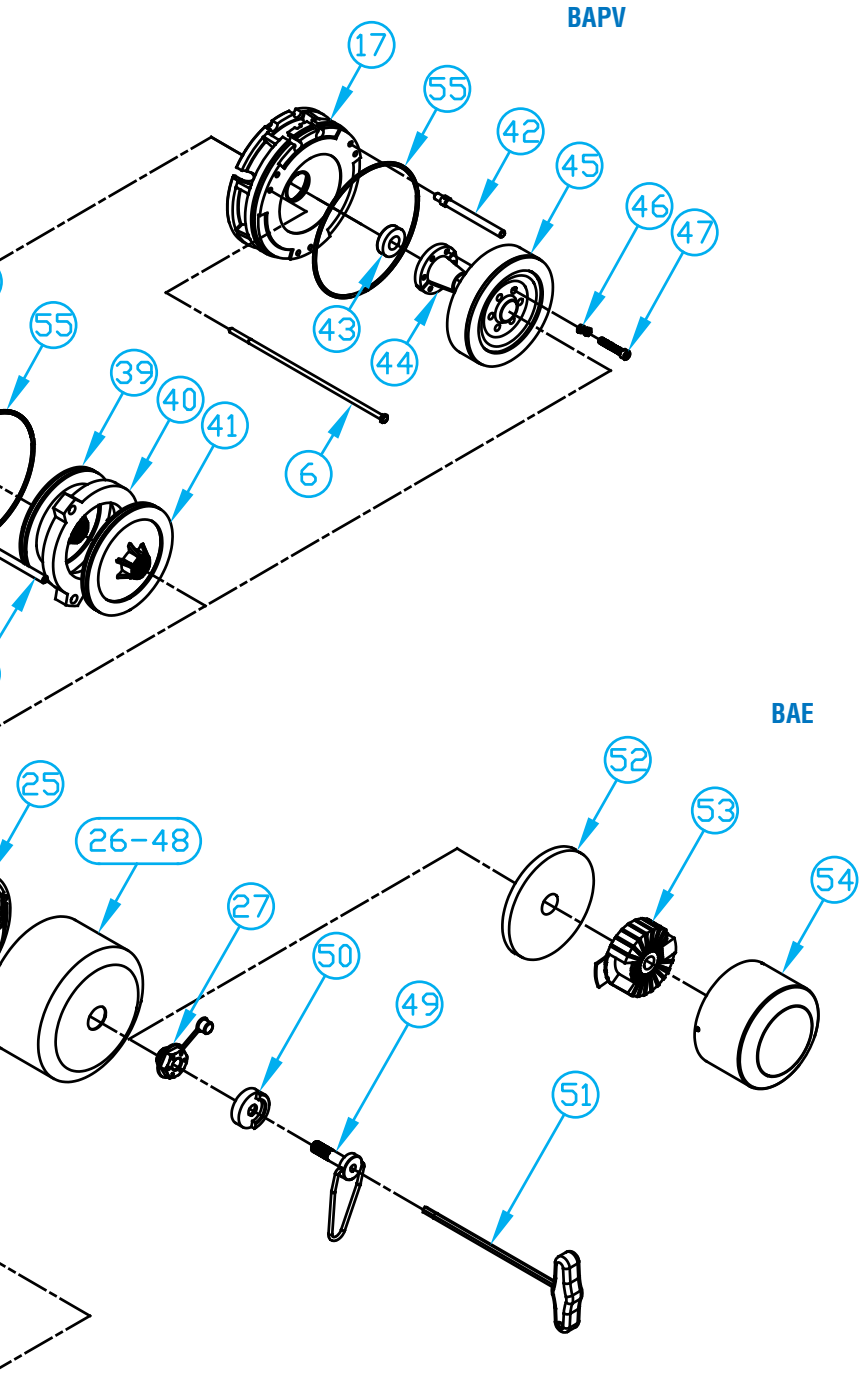

Rotor Shaft	1
Key	2
Bearing Drive End side	3
Endshield Drive End (front cover)	4
Tie rod assembly	6
Stator frame	7
Circlip	8
Endshield Brake Side (rear cover)	9
Fan	11
Fan fixing accessories	12
Bearing Non Drive Side	15
Brake Friction Surface	17
Spring	18
Brake adjuster	19
Brake torque adjuster locknut	20
Air gap adjusting nut	21
Brake coil locknut	22
Brake Disc	23
Brake Moving Element	24
Brake Coil	25
Brake Cover (BA)	26
Hexagonal Rear Nut (socket head nut)	27
Terminal Box Screws	28
Terminal Box (single or double)	29
Terminal Board	30
Cable Gland	32
Brake Coil Connection Cables	34
Flange B5 (Flange Mounting)	36
Flange B14 (Face Mounting)	37
Elastic Washer	38
Brake Disc (BAF)	39
Additional Brake surface (BAF)	40
Additional Brake Disc (BAF)	41
Long Brake Adjuster (BAPV-BAF)	42
Spacer (BAPV)	43
Taper Bush (BAPV)	44
Flywheel (BAPV)	45
Elastic Washer (BAPV)	46
Taper bush fixing screws (BAPV)	47
Brake Cover (BAPV-BAF)	48
Brake Release Screw	49
Fulcrum Hub for brake release (on request only)	50
Allen key for manual shaft rotation (on request only)	51
Encoder fixing plate (BAE)	52
Encoder (BAE)	53
Encoder protection cover (BAE)	54
Brake assembly O-Ring	55
Stainless steel plate (on request)	56
Hand brake release kit Unlocking type (not shown on the drawing)	//

spare parts

To clearly identify a spare part it's necessary to provide the item number (shown on the drawing below), the motor type, the rated voltage and frequency supply for electric parts such as the stator, the brake coil and the rectifier.

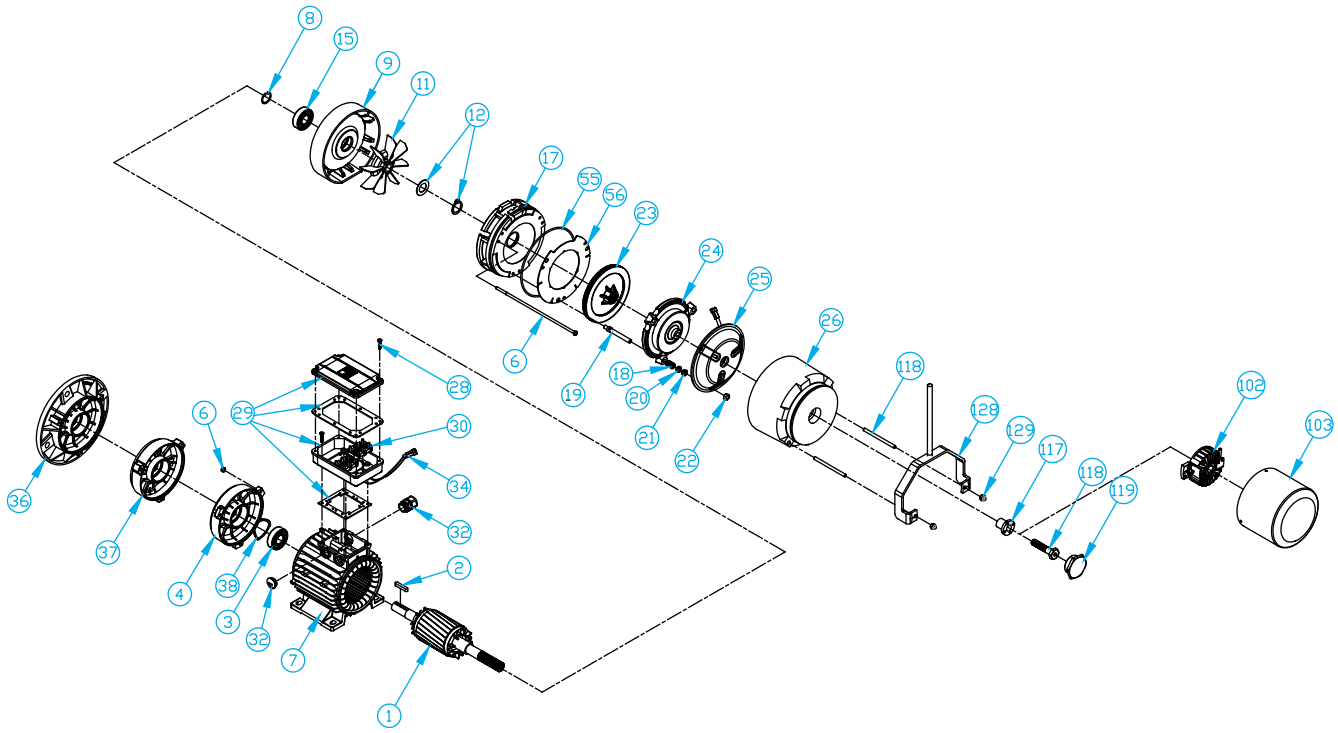

1 Rotor Shaft
2 Key
3 Front bearing
4 Front cover (B3)
6 Tie rod assembly
7 Stator frame
8 Circlip
9 Rear cover
11 Fan
12 Fan assembly
15 Rear bearing
17 Rear cover (brake surface) (BAH)
18 Spring
19 Brake adjuster (BAH)
20 Braking torque adjusting locknut
21 Air gap adjusting nut
22 Locknut
23 Brake disc
24 Brake moving element (BAH)
25 Brake coil (BAH)
26 Brake cover (BAH)
28 Terminal board box screws
29 Terminal board box (single or double)
30 Terminal board
32 Cable gland and plug
34 Terminal box/brake coil connection
36 Flange cover (B5)
37 Flange cover (B14)
38 Elastic washer
55 Brake assembly O-Ring
56 Inox plate
102 Encoder (BAHE, BAHXE)
103 Encoder cover (BAHE, BAHXE)
117 Brake cover KM locking ring (BAH)
118 Brake release screw (BAH)
119 Brake cover screw cap (BAH)
128 Unlocking hand brake release lever (optional)
129 Unlocking hand brake release locknut (optional)

To clearly identify a spare part it's necessary to provide the item number (shown on the drawing below), the motor type, the rated voltage and frequency supply for electric parts such as the stator, the brake coil and the rectifier.

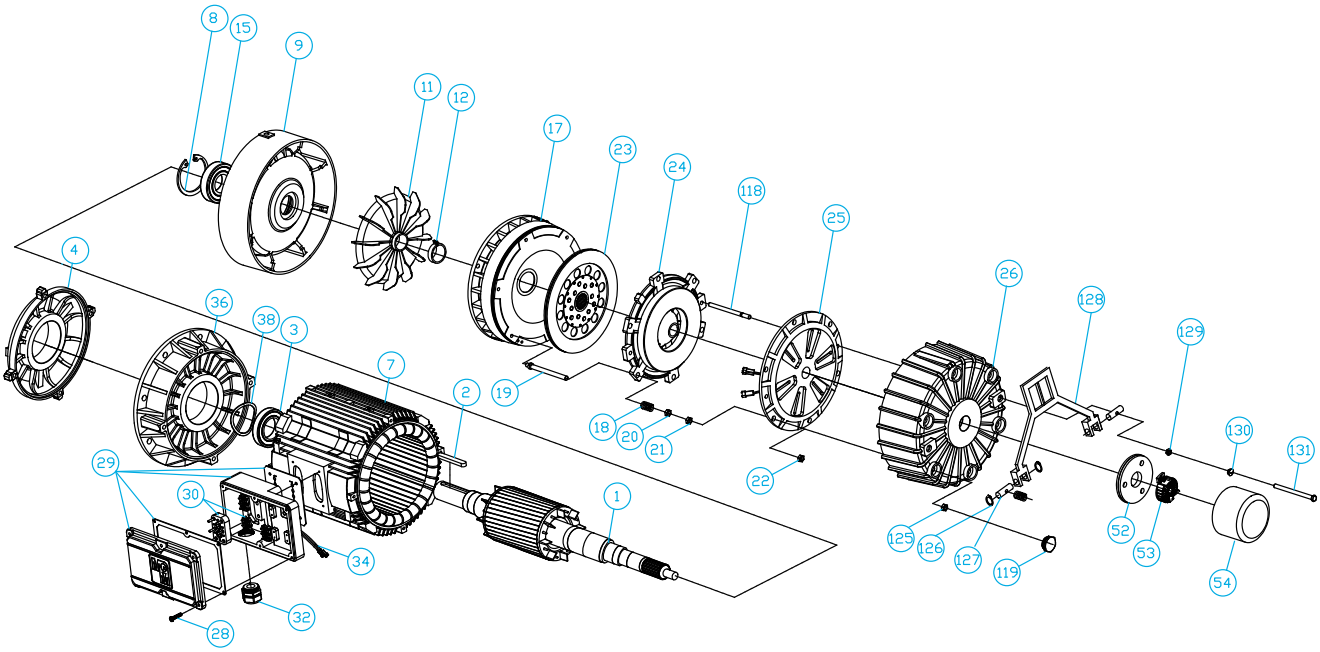

1 Rotor Shaft
2 Key
3 Front bearing
4 Endshield Drive End
7 Frame
8 Circlip
9 Rear cover
11 Fan
12 Rear cover seal
15 Rear bearing
17 Brake friction surface
18 Spring (6 units)
19 Brake adjuster (6 units)
20 Brake torque adjuster locknut (6 units)
21 Air gap adjusting nut (6 units)
22 Brake Coil Locknut (6 units)
23 Brake disc
24 Brake moving element
25 Brake coil
26 Cast Iron Brake Cover
28 Terminal board box screws (6 units)
29 Terminal board box
30 Terminal board
32 Cable gland
34 Terminal box/brake coil connection
36 Flange cover (B5)
38 Elastic washer
52 Encoder fixing plate (BAHE, BAHXE)
53 Encoder (BAHE, BAHXE)
54 Encoder protective cover (BAHE, BAHXE)
118 Unlocking type hand brake release screw (2 units)
119 Brake Adjuster Plug (6 units)
125 Brake Cover Locknut
126 Hinge for unlocking type brake release circlip (optional)
127 Hinge for unlocking type brake release (optional)
128 Unlocking type hand brake release lever (optional)
129 Unlocking type hand brake release locknut (optional)
130 Brake release plug
131 Locking type brake release screw (2 units)
132 Brake hand release locking screws

spare parts

To clearly identify a spare part it's necessary to provide the item number (shown on the drawing below), the motor type, the rated voltage and frequency supply for electric parts such as the stator, the brake coil and the rectifier.

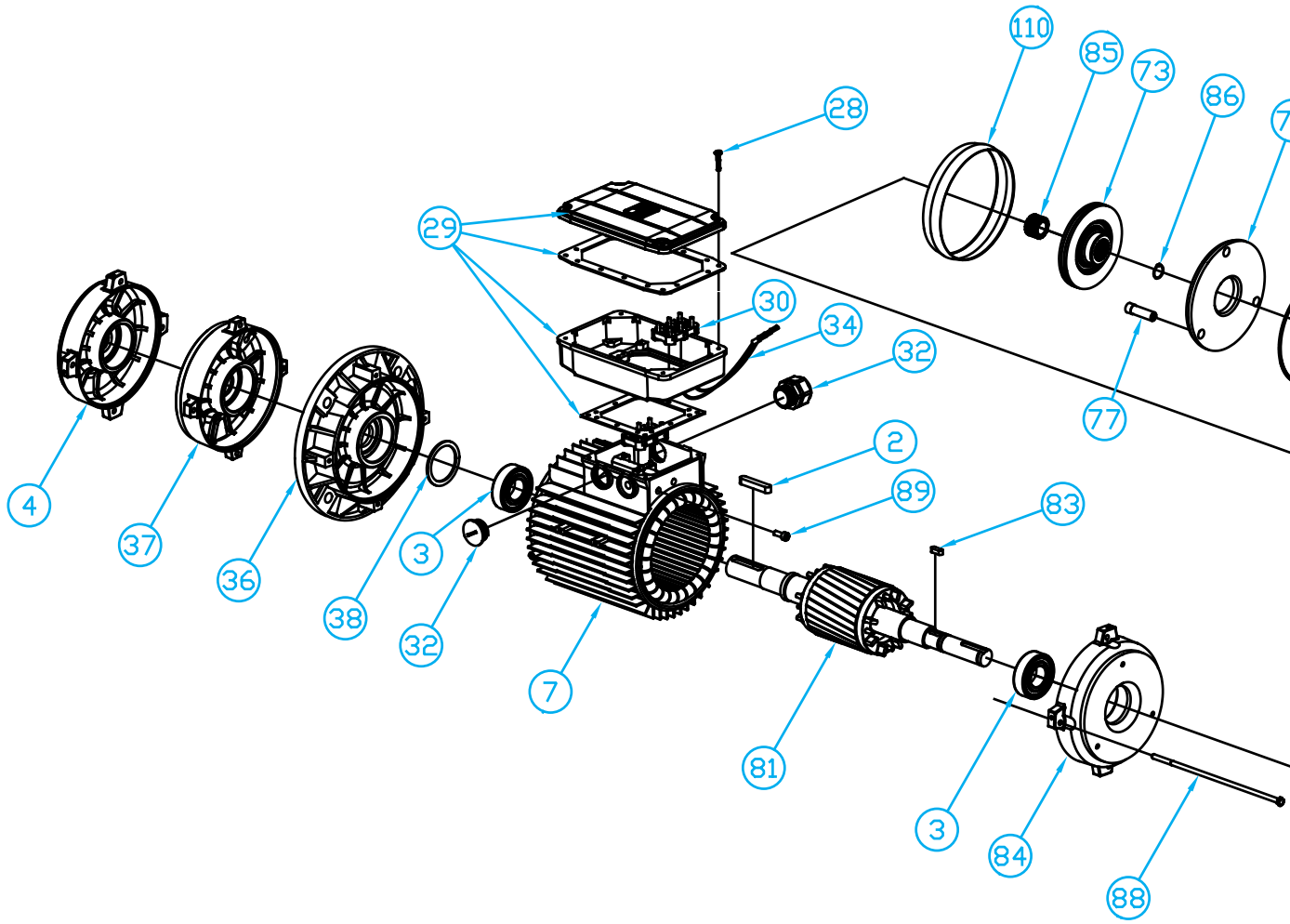

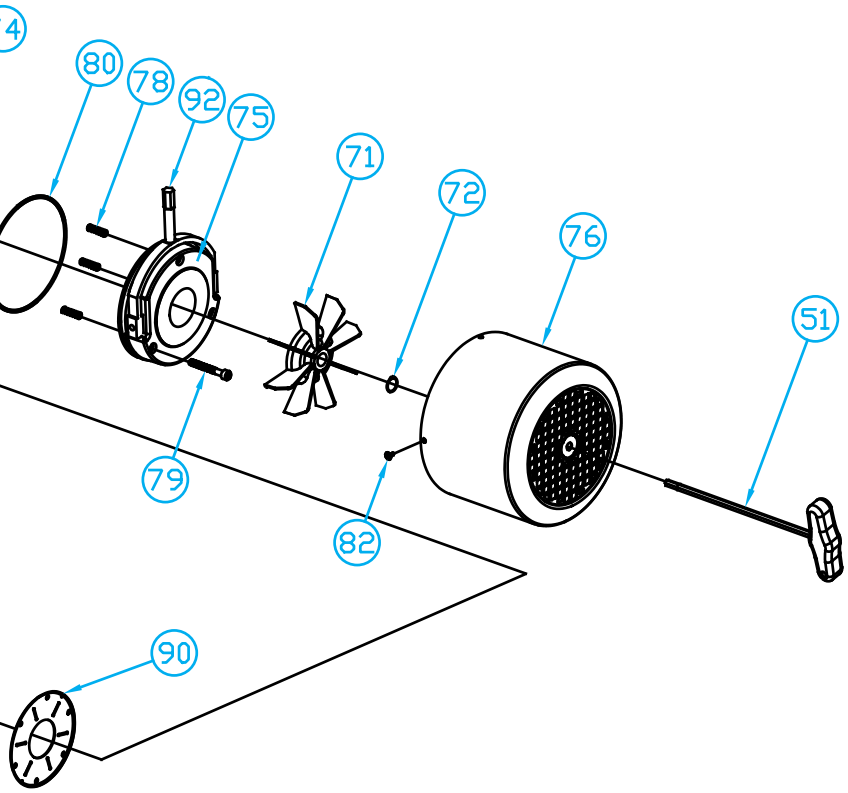

Key	2
Bearing Drive End Side	3
Endshield Drive End	4
Stator Frame	7
Terminal Box screws	28
Terminal Board	30
Cable Gland	32
Flange B5 (Flange Mounting)	36
Flange B14 (Face Mounting)	37
Elastic washer	38
Allen key for manual shaft rotation (on request only)	51
Fan	71
Fan Snap Ring	72
Brake Disc	73
Brake Moving Element	74
Brake Coil	75
Fan Cover	76
Connecting Screw	77
Adjustable or Fixed Springs	78
Brake Fixing Screw	79
Brake Assembly O-ring (on certain motor types only)	80
Rotor Shaft	81
Fan Cover Screw	82
Brake Assembly Key (on certain motor types only)	83
Endshield Brake Side (rear cover)	84
Hub (on certain motor types only)	85
Fixing Hub Snap Ring (on certain motor types only)	86
Terminal Box with built-in rectifier (in alternative double terminal board box; refer to page 13 for the rectifier type)	87
Tie Rod	88
Rubber Sleeve	89
Stainless steel plate (only for some types of motors)	90
Flywheel BMPV (not represented represented on the drawing)	91
Manual brake lever kit (on request)	92
Brake protective ring (on certain motor types only)	110

From our website (**www.mgmrestop.com**) in the section DOCUMENTATION you can download documents, images or technical support videos:

- 2D and 3D motors drawings
- technical data sheets
- wirings
- use and maintenance manuals
- videos showing how to carry out the main maintenance work on the motors (also visible on smartphone or tablet)
- photos of spare parts to better identify them
- certificates (cCSAus, CCC etc)
- catalogues
- technical documentation of various kind

COD. RIF. A05E2924

MGM motori elettrici SpA has made every effort to make this catalogue complete and accurate as of the time of printing. Since products are continuously being improved, all data are subject to changes or corrections. The data presented here are for general information to provide and overview of MGM capabilities. For specific applications, installation and operating instructions, certified dimensions, capabilities and performance data, pricing and availability, please contact MGM staff.

Serravalle P.se - Italy

Assago - Italy

Montreal - Canada

Detroit - USA

Chennai - India

İzmir - Turkey

MGM Motori Elettrici SpA was founded in 1947. Right from the start the company specialised in the production of electrical brake motors, becoming one of the leader companies in the world in this industry.
In Italy MGM has the main production plant in Serravalle Pistoiese and a warehouse with sales offices in Assago (Milan).
MGM also has plants in Montreal (Canada), Detroit (USA), Chennai (India) and Izmir (Turkey). Around the world, MGM is present in more than 70 countries with its own structures for sales and assistance.
Anywhere in the world, you can hardly see, wear, or use anything which does not have at least one component produced by an MGM brake motor.

We are present in more than 70 countries in the world with sales point and after sales points:

Algeria, Argentina, Armenia, Australia, Austria, Azerbaijan, Bangladesh, Belgium, Bolivia, Bosnia, Brazil, Bulgaria, Canada, Chile, China, Colombia, Croatia, Cyprus, Czech Republic, Denmark, Egypt, Estonia, Finland, France, Germany, Great Britain, Greece, Hungary, India, Indonesia, Ireland, Israel, Japan, Jordan, Kosovo, Latvia, Libya, Lithuania, Malaysia, Malta, Mexico, Montenegro, Morocco, Netherlands, North Macedonia, Norway, Pakistan, Peru, Philippines, Poland, Portugal, Romania, Russia, Saudi Arabia, Serbia, Singapore, Slovakia, Slovenia, South Africa, South Korea, Spain, Sweden, Switzerland, Taiwan, Thailand, Tunisia, Turkey, Ukraine, United Arab Emirates, United States, Venezuela, Vietnam.

EDITRICE ARTISTICA BASSANO

MGM Electric Motors

Italy

Head office and production
S/R 435 Lucchese Km 31
I - 51030 Serravalle Pistoiese (PT) - ITALY
Tel. +39 0573 91511 (r.a.)
Fax +39 0573 518138
Web www.mgmrestop.com
E-mail mgm@mgmrestop.com

North Italy branch office
I - 20090 Assago Milano - Via Fermi, 44
Tel. +39 02 48843593 - Fax +39 02 48842837

Canada

Head office and production
3600 F.X. Tessier, Unit # 140
Vaudreuil, Quebec J7V 5V5 - CANADA
Sales (877) 355 4343
Tel. +1 (514) 355 4343 - Fax +1 (514) 355 5199
Web www.mgmelectricmotors.com
E-mail info@mgmelectricmotors.com

USA

Head office
269 Executive Drive
Troy, MI 48083 - USA
Tel. +1 (248) 987 6572 - Fax +1 (248) 987 6569
Web www.mgmelectricmotors.com
E-mail infousa@mgmelectricmotors.com

India

Head office and production
PLOT NO. 6, VGP INDUSTRIALCOMPLEX,
50 Feet Road, Chettipedu,
Kancheepuram, Tamil Nadu, 602105 - INDIA
Tel. +91 96296 91777
Web www.mgmvarvelindia.com
E-mail info@mgmvarvelindia.com

Turkey

Head office and production
İTOB Organize Sanayi Bölgesi,
Ekrem Demirtaş Cad. No: 28 Menderes
İzmir - TURKEY
Tel. +90 232 799 0347 - Fax +90 232 799 0348
Web www.mgmmotor.com.tr
E-mail info@mgmmotor.com.tr